Hall closed loop variable range current sensor

Model: HTSR25-3

Closed loop,basbar built-in, PCB welding type; Change the connection mode of a bus variable three range.

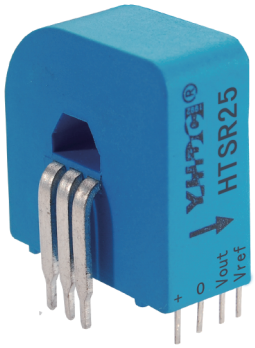

Technical Index:

Flame resistance: UL94-V0
Working temperature: -25～+70℃
Storage temperature: -25～+70℃
Band width: DC～150kHz
Dielectric strength: 3KV 50Hz 1min

Primary turns	Rated input (A)	Rated output (V)	connection way of primary pins
1	±25	1.65±0.625	IN 1 2 3 / 6 5 4 OUT
2	±12	1.65±0.6	IN 1 2 3 / 6 5 4 OUT
3	±8	1.65±0.6	IN 1 2 3 / 6 5 4 OUT

Electrical parameters:

I_{Pn}	Rated input	±25	A
I_{PM}	Input measured range	±37.5	A
V_{OUT}	Rated output	1.65±0.625	V
X	Accuracy	1	%
ε_L	Linearity	0.1	%
V_C	Supply voltage(±5%)	+3.3	V
I_C	Current consumption	≤20	mA+Is
R_L	Load impedance	≥10K	Ω
V_{OE}	Zero offset TA=25℃	≤±15	mV
T_R	Response time	≤0.5	μs
N.W	Weight	9	g

Connection diagram:

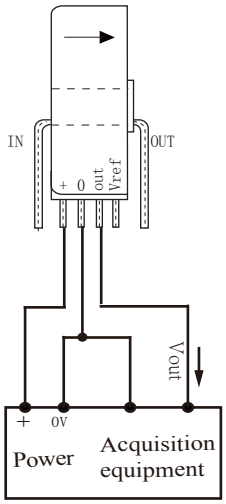

Dimensions（in mm）:

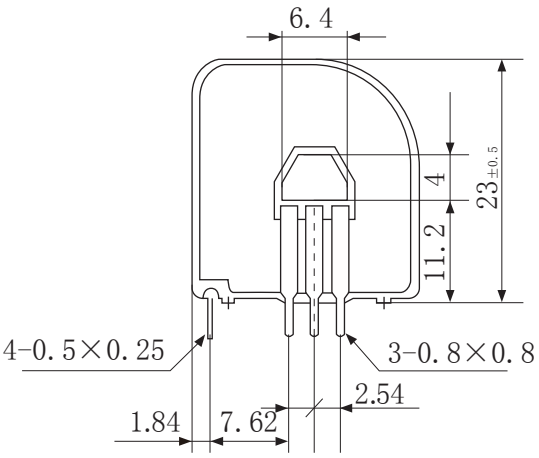

Front view

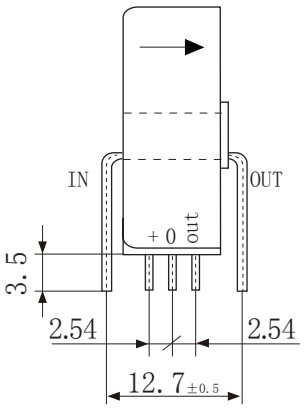

Side view

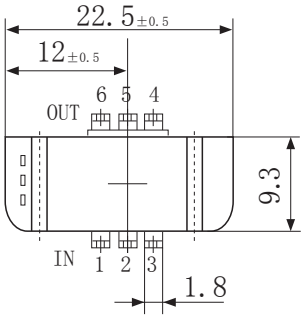

Bottom view