NAZONNI

Bread Maker

User Manual

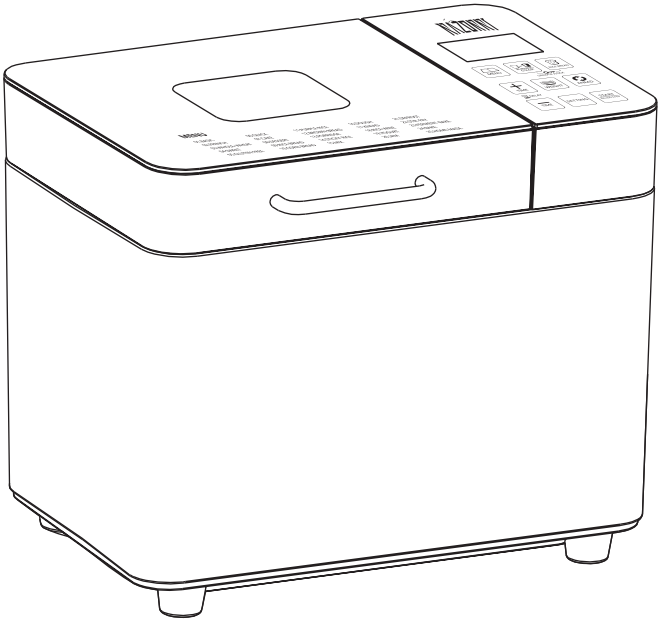

Model Fresco BM01A

Please read this user manual in its entirety before use and keep this manual for future reference.

Table of Content

1. IMPORTANT SAFEGUARDS 01
2. PARTS AND FEATURES 02
3. BEFORE THE FIRST USE 03
4. FUNCTIONS AND CONTROL PANEL 04
   - Display Panel 04
     - Power On 05
     - Touch Control Panel 05
     - Extra Features 06
     - Power Outage Restart 06
     - Error Codes 07
     - Keep Warm 07
5. INSTRUCTIONS 07
   - Making Bread 07
   - Removing Bread 09
   - Use Exact Measurement 09
   - Adding Sequence 09
     - Liquid Ingredients 09
     - Dry Measurements 09
6. PRESET MENU 10
7. CLEANING AND MAINTENANCE 13
8. TROUBLESHOOTING 13
9. COMMON INGREDIENTS & RECIPES 17
   - Common Ingredients 17
   - Recipes for Preset Menus 20

1. IMPORTANT SAFEGUARDS

Before using this electrical appliance, the following basic precautions should always be followed:

1. Read all and save these instructions for future uses.
2. Check that the voltage of the wall outlet corresponds to the one shown on the rating plate.
3. This appliance is not intended to be used by persons (including children) with reduced physical, sensory, or mental capabilities, or lack of experience and knowledge, unless they have been given supervision or instruction concerning use of the appliances by a person responsible for their safety.
4. Close supervision is necessary when any appliance is used by or near children. Children should be supervised to ensure that they do not play with the appliance.
5. Do not touch hot surfaces. Use handles or knobs. Always use oven mitts to handle hot bread pan or hot bread.
6. Do not put your hand inside the oven chamber after the bread pan is removed as the unit will still be hot.
7. To protect against electric shock do not immerse cord, plugs, or bread maker in water or other liquid.
8. Unplug from outlet when not in use and during cleaning. Allow the unit to cool completely before inserting or taking off parts, or before cleaning the appliance.
9. Do not operate any appliance with a damaged cord or plug or after the appliance malfunctions, or is dropped or damaged in any manner. Return the appliance to the manufacturer or the nearest authorized service agent for examination, repair, or electrical /mechanical adjustment. Contact customer support for more details.
10. The use of accessory attachments not recommended by the appliance manufacturer may cause injuries.
11. Do not use outdoors. For household use only.
12. Do not hang the cord over the edge of the table or the counter nor any hot surface.
13. Do not place the appliance on or near a hot gas or electric burner, or in a heated oven.
14. Extreme caution must be used when moving an appliance containing hot oil or other hot liquids.
15. Never use the appliance without a properly placed bread pan filled with ingredients.
16. Never beat the top nor the edge of the bread pan to remove bread as that may damage the bread pan.
17. Turn the appliance off before removing the plug from the wall outlet.

18. Do not put eyes or face in close proximity to the viewing window, in case the tempered glass breaks.
19. This appliance has been incorporated with a grounded plug. Please ensure the wall outlet in your house is well grounded.
20. Do not touch any moving parts of the machine during operation.
21. Do not operate the appliance other than intended use.
22. Clean the oven interior carefully. Do not scratch or damage the heating element tube.

2. PARTS AND FEATURES

Before using this electrical appliance, the following basic precautions should always be followed:

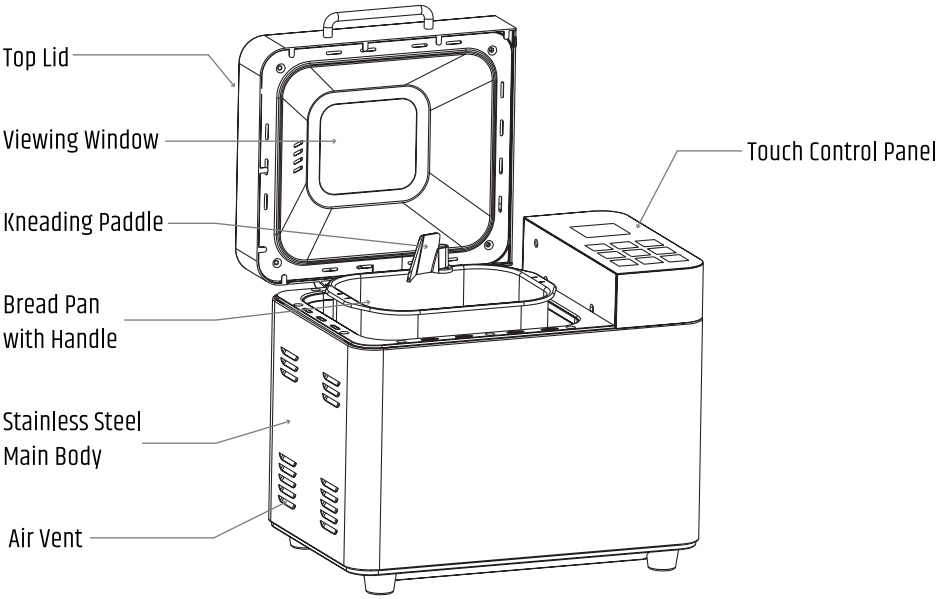

Measuring Cup

Measuring Spoon

Hook
(Kneading Paddle Remover)

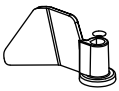
Kneading Paddle

Oven Mitt

Model	
Rated Power	600W
Rated Voltage	120V ~ 60Hz
Display	LCD
Power Cord Length	39.4 IN (1.0 M)
Weight	12.7 LB (5.75 KG)

3. BEFORE THE FIRST USE

Wash the bread pan and the kneading paddle and let it dry.

Note: Do not use metal utensils in bread pan since they may damage the non-stick surface.

CAUTION! The bread maker can wobble and shift during the kneading cycle. Always position it in the center of the counter away from the edge where it can fall.

1. Check for any missing or damaged parts.
2. Clean all the parts according to the "CLEANING AND MAINTENANCE" section.
3. Set the bread maker on bake mode and run the machine empty for about 10 minutes. Then let it cool down and clean the removable parts again. The appliance may emit a little smoke and/or odor when you turn it on for the first time. This is normal and will subside after the first or second use. Make sure the appliance has sufficient ventilation.
4. Dry all parts thoroughly and assemble them. Now the appliance is ready for use.

USE ENVIRONMENT

The machine works well in a wide range of temperatures, but there will be differences in loaf size between a very hot room or a cold room. We suggest that the room temperature should be within the range of 59 °F to 93.2 °F.

4. FUNCTIONS AND CONTROL PANEL

Display Panel

Icon	Function	Description
	Delayed-Start	Only flashes when the delayed-start timer has been set
123	Stir	Including Phase 1, Phase 2 and Phase 3
	Rest	Rest the dough
	Fermentation	Ferments the dough
500g 750g 1000g	Weight Selection	Select with the "WEIGHT" button. The larger selection takes longer programming time.
88	Menu Code	From 01-25, select by using the "MENU" button.
88:88	Timer	Timer for all programs.
	Lock	You can activate the Lock by pressing CRUST SHADE+RICE BREAD button together, and unlock with pressing them again.
	Crust Shade	Light / Medium / Dark
	Preheat	The heating element is heating up for baking.

Icon	Function	Description
	Bake	Bake with only the heat elements working without any fermentation nor stirring. You may also add baking time with preset program #24
	Keep Warm	After the baking program is completed, the machine will beep 10 times and auto-shift to Keep Warm for 1 Hour.
	Complete	Displays after Keep Warm ends.

Power On

Plug the power cord into the wall outlet. A beep will be heard and the LCD will show the defaultly display of “3:40” on timer, “1” on program code, loaf “750g” and “MEDIUM” shade, without flashing.

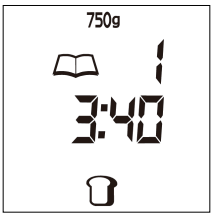

Touch Control Panel

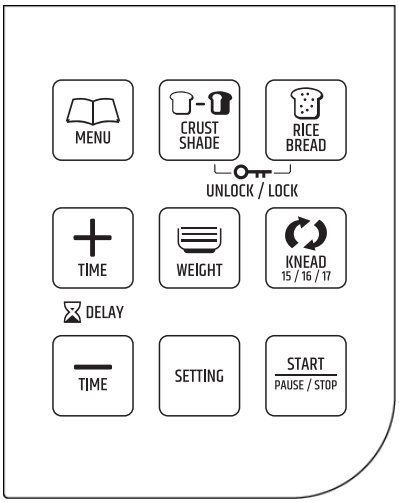

Icon	Button Name	Feature
	START/ (PAUSE)STOP	Press once to **Start** the selected preset menu; Press again to **Pause**; Hold for 3 seconds to **Stop**
	MENU	To navigate from menu 1 to menu 25 (check page 10-12 for all information)
	CRUST SHADE	Select the crust shade: Light / Medium / Dark
	RICE BREAD	Quick select to menu #9 Rice Bread
	LOCK	Press CRUST SHADE and RICE BREAD together to fully **lock** the control panel. Press again to unlock. (While the machine is running, only the START/STOP button is active)
	Timer Adjustment Increase time / Decrease time	Press "+" to increase the timer, press "-" to decrease the timer. While the timer is larger than the preset menu, the delayed-start is active.The delayed-start icon on the display will flash.
	WEIGHT	Select the weight for programs: 500g, 750g, 1000g (This button is only applicable for the following programs: 1-6, 9-12.)
	KNEAD	Cycle through three kneading menus: #15 keep kneading, #16 continuously knead and let dough rise, #17 knead the dough only, no rising or baking
	SETTING	Quick select menu #25 and customize the DIY program.

Extra Features

Power Outage Restart

In the event of a power outage, the process of making bread will continue automatically if power is restored within 10 minutes.

If the power interruption time is longer than 15 minutes, the unit will not continue running and the LCD will revert back to the default setting.

If the dough has started rising, discard the ingredients in the bread pan and start over.

If the dough has not entered the rising phase when the power is interrupted, you can press the **START/STOP** button to continue the program from the beginning.

Error Codes

"HHH" - This warning means that the temperature inside of the bread pan is too high. Press the **START/STOP** Button to stop the program, unplug the power cord, open the top lid, and let the machine cool down completely for 10-20 minutes before restarting.

"EE0" - This warning means that the temperature sensor is disconnected. Press the **START/STOP** button to stop the program and unplug the power cord. Please check the sensor at the nearest authorized service agent for examination, repair or electrical /mechanical adjustment. Contact customer support for more information.

Keep Warm

After the baking program is complete, the machine will beep 10 times and auto-shift to Keep Warm for one hour.

The control panel displays 0:00 and the KEEP WARM icon will be on . One hour later, the icon will display on the LCD and the keep warm function will shut off.

You can also hold the **START/STOP** button for 3 seconds to stop the keep warm function.

TIP: Removing bread immediately after the baking program is completed will prevent the crust from becoming darker.

5. INSTRUCTIONS

Making Bread

① Using the bread pan handler, turn the bread pan counter-clockwise and pull it out of the appliance.

② Push the kneading paddle onto the drive shaft inside the bread pan.

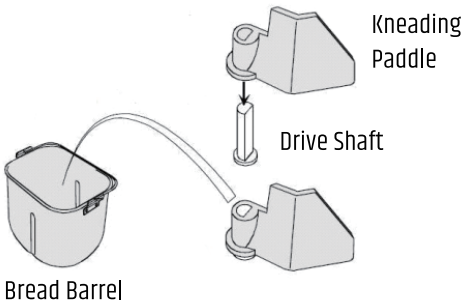

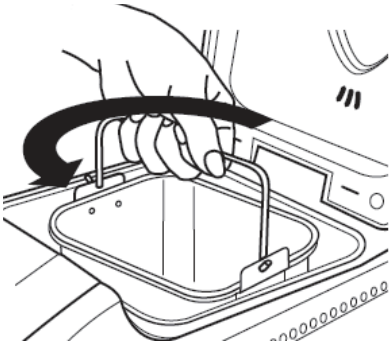

③ Add ingredients to the bread pan in the order listed in the recipe. Accordingly add the liquids, sugar, and salt; then the flour; and the last one is the yeast.

④ Carefully measure and add ingredients to the bread pan in the EXACT order given in the recipe.

***NOTE:** Make a small indentation on the top of flour with finger and add yeast into the indentation. Make sure that yeast does not come into direct contact with salt or liquids.

FIRST: Liquid ingredients - room temperature.
SECOND: Dry ingredients (sugar, salt, shortening, flour)
LAST: Yeast. Must be separate from wet ingredients.

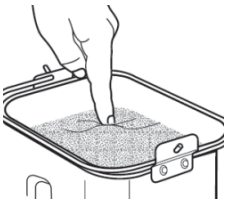

TIP: Measure all ingredients including add-ins (nuts, raisins) before starting.

⑥ Place the bread pan into the bread maker and make sure it is firmly locked in place by turning it clockwise. Close the lid.

NOTE: Bread pan must lock into place for proper mixing and kneading.

⑦ Plug in the appliance. A beep will be heard and the LCD display will default to Program 1.

⑧ Press MENU button until your desired program is displayed.

⑨ Press the WEIGHT button to move the arrow to 500g,750g,1000g. (WEIGHT is not an option for programs 7-8 or 13-25.)

⑩ Press the CRUST button to move the arrow to desired setting: Light, Medium, Dark crust. Crust is not adjustable in programs 13-22.

⑪ If desired, set the DELAY TIMER button. Press + and - buttons to increase the cycle time shown on the LCD. (Delay function is not available for programs 6-8, 13, 15, or 17-24.)

NOTE: Do not use the feature when using dairy, eggs, etc. This step may be skipped if you want the bread maker to start working immediately.

⑫ Press the START/STOP button once to start program. Bread maker will beep once and "3:40" will Be displayed. The colon between the "3" and "40" doesn't flash constantly and the indicator will light up.The kneading paddle will begin to mix your ingredients. If the Delayed-start Timer is activated, the kneading paddle will not mix ingredients until the program is set to begin.

⑬ During operation you will hear 5 beeps. At that time; you can open the lid and pour your add-ins (nuts, fruits, etc). This function is adjustable in programs: Menu 1-6, 9-12, 25. The timing varies by program.

⑭ Once the process is complete, ten beeps will be heard and the machine will shift to the Keep Warm setting for 1 hour. You can press the START/STOP button for 3 seconds to stop the process and the Keep Warm setting will end. Unplug the power cord and then open the lid using oven mitts.

NOTE: Store remaining bread in a sealed plastic bag for up to three days at room temperature. To store for a longer time, place the sealed plastic bag in the refrigerator for up to 10 days.

Removing Bread

The bread pan and baking chamber will be hot and oven mitts should be used. Remove the bread pan by lifting the handle and turning it counterclockwise to unlock and pull the bread pan straight up from the base of the chamber.

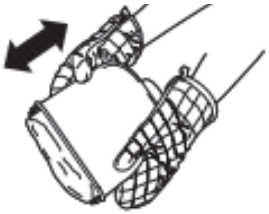

Carefully shake the bread upside down until the bread falls out of the bread pan. Allow to cool on a wire rack for 10 minutes before slicing and slicing with a bread knife.

TIP: If a kneading paddle comes out in the loaf, remove it with a spatula or small utensil.

Use Exact Measurement

TIPS: Measure each ingredient carefully and add to your bread pan in the order given in the recipe.

It is strongly suggested to use measuring cups or kitchen scales to obtain an accurate amount, otherwise the end result may vary from the recipe.

Adding Sequence

1. Always add ingredients in the order given in the recipe.

   First: Liquid ingredients; **Second:** Dry ingredients; **Last:** Yeast

   Note: The yeast should only be placed on the dry flour and never come in contact with the liquid or salt.

2. When you use the Delay Timer function for a long time, never add perishable ingredients such as eggs or milk.
3. After the flour is completely kneaded for the first time a beep will be heard. At this time you can add any fruit ingredients or other add-ins to the mixture.
4. If the fruit ingredients are added too early, the flavor will be diminished after a long time stirring.

Liquid Ingredients

Water, fresh milk, or other liquids should be measured with measuring cups. Set the cup on the counter to check the liquid level. When measuring cooking oil or other ingredients, clean the measuring cup thoroughly first.

Dry Measurements

Measure the dry ingredients by gently pouring flour, etc., into the measuring cup and leveling off with a knife for precise measurement.

TIP: Before measuring, stir the flour to aerate it. When measuring small amounts of dry ingredients, such as salt or sugar, use a measuring spoon, making sure it is leveled off.

6. PRESET MENU

Note: For those programs including a suggested adds-on timer (such as nuts or fruits), the appliance will beep 10 times, and beep 10 times again while the whole program ends.

1. Basic Bread

For white and mixed breads, it mainly consists of basic bread flour.
After the process running 25 minutes, 10 beeps will be heard, once the Stir 3 starts, It's a good time to put in any add-ins.

2. French Bread

Light breads are made from fine flour. Normally the bread is fluffy and has a crispy crust. This is not suitable for baking recipes requiring butter, margarine or milk.
After the process running 60 minutes, 10 beeps will be heard, during the stir 4 running, It's a good time to put in any add-ins.

3. Whole-Wheat Bread

It mainly consists of whole wheat bread flour. This setting has a longer preheat time to allow the grain to soak up the water and expand. It is not advised to use the delay function as this can produce poor results. Whole-wheat usually produces a crispy thick crust.
After the process running 45 minutes, 10 beeps will be heard, once the Stir 4 starts, It's a good time to put in any add-ins.

4. Sweet Bread

For sweet breads setting are for baking breads contain high amounts of sugar, fats and proteins, all of which tend to increase browning. Due to a longer phase of rising the bread will be light and airy.
After the process running 70 minutes, 10 beeps will be heard, during the stir 4 running, It's a good time to put in any add-ins.

5. Gluten Free Bread

For the bread of gluten-free flurs and baking mixtures. Gluten-free flurs require longer for the uptake of liquids and have different rising properties.
After the process running 30 minutes, 10 beeps will be heard, once the Stir 3 starts, It's a good time to put in any add-ins.

6. Quick Bread

Kneading, rising and baking time is shorter than basic bread but longer than Ultra-fast bread. The bread's interior tissue is denser. Quick breads are made with baking powder and baking soda that are activated by moisture and heat. For perfect quick breads, it is suggested that all liquids be placed in the bottom of the bread pan; dry ingredients on top, during the initial mixing of quick bread batters, dry ingredients may gather at the corners of the pan, it may be necessary to help machine mix to avoid flur clumps. If so, use a rubber spatula.
After the process running 20 minutes, 10 beeps will be heard, once the Stir 3 starts, It's a good time to put in any add-ins.

7. Cake
Kneading, rising and baking occurs, but rise with the aid of soda or baking powder.

8. Dessert
Kneading and baking those foods which contain more fat and protein.

9. Rice Bread
Mix cooked rice into the flour with 1:1 to make the bread.
After the process running 45 minutes, 10 beeps will be heard, once the Stir 4 starts, It's a good time to put in any add-ins.

10. Corn Bread
Mix cooked corn into the flour with 1:5 to make the bread.

11. Purple Bread
Mix cooked purple rice into the flour with 1:3 to make the bread.
After the process running 45 minutes, 10 beeps will be heard, once the Stir 4 starts, It's a good time to put in any add-ins.

12. Brown Bread
Mix rye flour into the bread flour with 1:3 to make the bread.
After the process running 30 minutes, 10 beeps will be heard, during the stir 3 running, It's a good time to put in any add-ins.

13. Porridge
Mix the rice, lotus, Longan, red bean, Chinese wolfberry, Red dates, and peanut into the water to make the porridge.

14. Sticky Rice
Stirring and heating to make glutinous rice balls.

15. Mix
Stir to let the flur and liquids mix thoroughly.

16. Dough
This program prepares the yeast dough for buns, pizza crust, etc. There is no baking in this program.

17. Knead
Kneading only, no rising or baking. Used for making dough for pizzas etc.

18. Rice Wine
Rising and baking the polished glutinous rice.

19. Yogurt

Rising and making the yogurt.

20. Jam

Use this setting for making jams from fresh fruits and marmalade from oranges and lemons. Do not increase the quantity or allow the recipe to boil over the bread pan into the baking chamber. If this happen, stop the machine immediately and remove the bread pan carefully. Give time to cool a little and clean thoroughly.

20. Defrost

For defrosting frozen food before cooking.

22. Stir-fry

Kneading and baking some dry fruit such as peanuts, soybeans etc.

23. Ferment & Bake

Rise and bake bread without kneading. Ferment & Bake is suitable for those breads need further manual process. After you have dough made by hand or use the MIX menu to process.

For example, you'd like to knead your desired shape or add ingredients into the bread. After this process, put back the dough into the bread pan, then choose this menu to complete ferment and bake program automatically.

24. Bake

Additional baking of breads is needed, because a load is too light or not to bake through. In this program, there is no kneading or resting.

Program Setting	Default Time (min)	Adjustable Time (min)
Stir 1	15	0-30
Rest 1	3	0-30
Stir 2	20	0-30
Rest 2	10	0-30
Stir 3	0	0-25
Ferment 1	42	0-60
Ferment 2	40	0-60
Ferment 3	0	0-60
Bake	50	0-80
Keep warm	60	0-60
Delayed-Start Time		15 hour

NOTE: Storing Homemade Bread

Fresh-baked bread is best to be consumed as soon as possible. Store remaining bread in a sealed plastic bag for up to three days at room temperature. To store for a long time, place a sealed plastic bag in the refrigerator for up to 10 days.

7. CLEANING AND MAINTENANCE

Disconnect from power before cleaning. Do not immerse cord, plug, or housing in any liquid. Allow the bread maker to cool down completely before cleaning.

1. To clean the kneading paddle: If the kneading paddle is difficult to remove from the bread, add water to the bottom of the bread pan and soak for up to 1 hour. Wipe the paddle carefully with a damp cloth. Both the bread pan and kneading paddle are dishwasher-safe.
2. To clean the bread pan: Remove the bread pan from the machine by turning it counterclockwise, and then lift up by the handle. Wipe inside and outside of the pan with damp cloth. Do not use any sharp or abrasive agents in order to protect the non-stick coating. The bread pan must be dried completely before installation.

   Note: The bread pan and kneading paddle are dishwasher-safe. The outside of the bread pan and base may discolor. This is normal.
3. To clean the housing and top lid: after use, allow the unit to cool. Use a damp cloth to wipe the lid, housing, baking chamber and interior of the viewing window. Do not use any abrasive cleaners for cleaning, since this will degrade the high polish of the surface. Never immerse the housing into water for cleaning.

   Note: It is suggested not to disassemble the lid for cleaning.
4. Before the bread maker is packed for storage, ensure that it has completely cooled down, is clean and dry, and the lid is closed.

8.TROUBLESHOOTING

NO.	PROBLEM	PROBLEM CAUSE	SOLUTION
1	Odor or burning smell	*Flour or other ingredients have spilled into the baking chamber.	*Stop the bread maker and allow it to cool completely. Wipe excess debris from the baking chamber with a paper towel.

NO.	PROBLEM	PROBLEM CAUSE	SOLUTION
2	Ingredients not blending can hear motor grinding	*Bread pan or kneading paddle may not be installed properly. *Too many ingredients.	*Make sure the kneading paddle is set all the way on the shaft. *Measure ingredients accurately
3	"HHH"displays when START/STOP button is pressed.	*Internal temperature of bread maker is too high.	*Allow unit to cool down in between programs. Unplug unit, open lid, and remove bread pan. Allow to cool 15-30 minutes before beginning new programs.
4	Window is cloudy or covered with condensation.	*May occur during mixing or rising programs.	*Condensation usually disappears during baking programs. *Clean the window well after each use. *It is not uncommon for the kneading
5	Kneading paddle comes out with the bread.	*Thicker crust with dark crust setting.	Paddle to come out with the bread loaf. Once the loaf cools,remove the paddle with a spatula.
6	Dough is not blending thoroughly; flour and other ingredients are built up on sides of pan; bread loaf is coated with flour	*Bread pan or kneading paddle may not be installed properly. *Too many ingredients. *Gluten-free dough is typically very wet. It may need additional help by scraping sides with a rubber spatula.	*Make sure the bread pan is securely set in a unit and the kneading paddle is firmly on the shaft. *Make sure ingredients are measured accurately and added in the proper order. *Excess flour can be removed from Loaf once baked and cooled. Add water, one tsp at a time,until dough has formed into a ball.

NO.	PROBLEM	PROBLEM CAUSE	SOLUTION
7	Bread rose too high and pushed the lid up.	*Ingredients measured improperly (too much yeast, flour, etc.) *Kneading paddle not in bread pan. *Forgot to add salt.	*Measure all ingredients accurately and make sure sugar and salt have been added. *Try decreasing yeast by ¼ tsp (1.2ml). *Check installation of kneading paddle.
8	Bread does not rise and the size is small.	*Incorrect measurement of ingredients or inactive yeast. *Lifting lid during program.	*Measure all ingredients accurately. *Check expiration date of yeast and flour. *Liquid should be at room temperature.
9	Bread has a crater in the top of the loaf once baked.	*Dough has risen too fast. *Too much yeast or water. *Incorrect program chosen for the recipe.	*Do not open the lid during baking. *Select a darker crust option.
10	Crust color is too light	*Opening the lid during baking.	*Do not open the lid during baking. *Select a darker crust option.
11	Crust color is too dark	*Too much sugar in the recipe	*Decrease sugar amount slightly. *Select a lighter crust option
12	Bread loaf is lopsided.	*Too much yeast or water. *Kneading paddle pushed dough to one side before rising and baking.	*Measure all ingredients accurately. *Decrease yeast or water slightly. *Some loaves may not be evenly Shaped, particularly with whole-grain flour.
13	Loaves made are different shapes.	*Varies by the type of bread.	*Whole-grain or multigrain is denser and may be shorter than a basic white bread.

NO.	PROBLEM	PROBLEM CAUSE	SOLUTION
14	Bottom is hollow or holey inside.	*Dough too wet, too much yeast, no salt. *Water is too hot.	*Measure all ingredients accurately *Decrease yeast or water slightly. *Check salt measurement. *Use room temperature water.
15	Under baked or too sticky	*Too much liquid or incorrect program chosen.	*Decrease liquid and measure ingredients carefully. *Check program chosen for recipe
16	Bread mashes down when slicing.	*Bread is too hot	*Allow to cool on wire rack for 15-30 minutes before slicing.
17	Bread has a heavy, thick texture	*Too much flour; flourisn't fresh. *Not enough water.	*Allow to cool on wire rack for 15-30 minutes before slicing. *Try increasing water or decreasing flour. *Whole-grain breads will have a heavier texture.
18	Base of bread pan has darkened or is spotted.	*After washing in the dishwasher.	*It is normal and will not affect the Bread pan.

ENVIRONMENT FRIENDLY DISPOSAL

You can help protect the environment! Please remember to respect the local

Regulations: hand in the non-working electrical equipment to an appropriate Waste disposal center.

9. COMMON INGREDIENTS & RECIPES

Common Ingredients

1. Bread Flour

Bread flour is the most important ingredient of making bread and is recommended in most yeast-bread recipes. It has a high gluten content (so it may be called high-gluten flour which contains high protein), and keeps the size of the bread from collapsing after rising. Flour varies by region.

The gluten content is higher than the all-purpose flour, so it can be used for making bread with large size and higher inner fiber.

2. All-Purpose Flour

Flour that contains no baking powder and is suitable for Quick Breads or bread made with the Quick settings. Bread flour is better suited for yeast breads.

3. Whole-Wheat Flour

Whole-wheat flour is ground from the entire wheat kernel. Bread made with whole wheat flour contains higher fiber and nutritional content. Whole-Wheat flour is heavier so as a result, loaves may be smaller in size and have a heavier texture.

Whole wheat flour contains wheat skin and gluten. Many recipes usually combine with whole -wheat flour or bread flour to achieve the best result.

4. Black Wheat Flour

Black Wheat Flour, also called "Rye Flour", is a kind of high fiber flour similar to whole-wheat flour. To obtain the large size after rising, it must be used in combination with a high proportion of bread flour.

5. Self-rising Flour

Flour that contains baking powder, used especially for making cakes. Do not use self-rising flour in combination with yeast.

6. Corn Flour and Oatmeal Flour

Corn flour and oatmeal flour are ground from corn and oatmeal separately. They are the additive ingredients of making rough bread, which are used for enhancing the flavor and texture.

7. Sugar

Sugars are "food" for yeast and also increase the sweet taste and color of bread. It is a very important element of making the bread rise. White sugar is normally used, however, brown sugar, powdered sugar or cotton sugar may also be called for in some recipes.

8. Yeast

Yeast is a living organism and should be kept in the refrigerator to remain fresh.It needs carbohydrates found in sugar and flour as nourishment. Yeast used in bread maker recipes will be sold under several different names: bread machine yeast(preferred), active-dry yeast, and instant yeast.

After the yeast process, the yeast will produce carbon dioxide. The carbon dioxide will expand the bread and make the inner fibers soften.

1 Tbsp dry yeast = 3 Tsp dry yeast

1 Tsp dry yeast = 5ml dry yeast

1 Tsp dry yeast = 4 g dry yeast

Before using, check the expiration date and storage time of yeast. Return to the refrigerator immediately after each use, the fungus will be killed at high temperature, usually the failure of bread rising is caused by bad yeast.

TIP: To check whether your yeast is fresh and active:

(1) Pour 1 cup (237ml) warm water (113-122 ℉) into a measuring cup.

(2) Add 1 Tsp (5ml) white sugar into the cup and stir, then 1 Tsp (15ml) yeast over the water.

(3) Place the measuring cup in a warm place for about 10min. Do not stir the water.

(4) Fresh, active yeast will begin to bubble or"grow" .If it does not, the yeast is dead or inactive.

9. Salt

Salt is necessary to improve bread flavor and crust color. It is also used to restrain yeast activity. Never use too much salt in a recipe. Bread will be larger if it is made without salt.

10. Egg

Eggs can improve bread texture, make the bread more nourishing, or increase the size. The egg must be whisked in with the other liquid ingredients. Never use eggs with the Delay Timer option.

11. Grease, Butter and Vegetable Oil

Grease can make bread soften and delay storage life. Butter should be melted or chopped to small pieces before adding to liquid.

12. Baking Powder

Baking powder is used for raising the Ultra Fast bread and cake. As it does not need rise time, it can produce the air bubbles which will soften the texture of bread.

13. Baking Soda

It is similar to baking powder. It can also be used in combination with baking powder.

14. Water and Other Liquids (always add first)

Water is an essential ingredient for making bread. Generally speaking, water should be at room temperature between 68°F and 77°F. Some recipes may call for milk or other liquids for the purpose of enhancing bread flavor.

Never use dairy with the Delay Timer option.

Measurement / Conversion Chart

1½ Teaspoons	= ½ Tablespoon	8 Tablespoons	= ½ Cup
3 Teaspoons	= 1 Tablespoon	12 Tablespoons	= ¾ Cup
½ Tablespoon	= 1½ Teaspoons	16 Tablespoons	= 1 Cup
4 Tablespoons	= ¼ Cup		

Ingredient Conversion Chart

Ingredient	Volume	Weight in Grams
Unsalted Butter	1 Tablespoon (15 ml)	14 g
Kosher Salt	1 Teaspoon (3 ml)	6 g
Granulated Sugar	1 Tablespoon	14 g
High Gluten Flour	1 Cup (237 ml)	126 g
Yeast Active Dry	1 Teaspoon	4 g
Egg (Out of Shell)	1 Large	50 g
Oil	1 Tablespoon	13 g

Recipes for Preset Menus

Menus		Ingredient	Volume	Volume	Volume	Remark
1. Basic Bread		Bread	500 g	750 g	1000 g	
	1	Water	210 ml	260 ml	320 ml	
	2	Butter	1 Tbsp/10g	1 ½Tbsp/20g	2 Tbsp/30g	
	3	Salt	½ Tsp/3g	¾ Tsp/4g	1 Tsp/6g	Put on the corner
	4	Sugar	¼ Tbsp/4g	½ Tbsp/7g	¾ Tbsp/10g	Put on the corner
	5	High Gluten Flour	2 ½cups/320g	3 ¼ cups/420g	4 cups/500g	
	6	Instant Yeast	¾ Tsp/3g	1 Tsp/4g	1 Tsp/4g	Put on the dry flour,don't touch with any liquid.
2. French Bread		Bread	500 g	750 g	1000 g	
	1	Water	180 ml	260 ml	320 ml	
	2	Butter	2 Tbsp/26g	2 ¾ Tbsp/38g	3 ¼ Tbsp/45g	
	3	Salt	½Tsp/3g	¾ Tsp/4g	1 Tsp/6g	Put on the corner
	4	Sugar	1 ½Tbsp/21g	1 ½Tbsp/21g	2 Tbsp/28g	Put on the corner
	5	High Gluten Flour	2 ½ cups/300g	3 ¼ cups/400g	4 cups/500g	
	6	Instant Yeast	¾ Tsp/3g	1 Tsp/4g	1 Tsp/4g	Put on the dry flour,don't touch with any liquid.

Menus		Ingredient	Volume	Volume	Volume	Remark
3. Whole-wheat Bread		Bread	500 g	750 g	1000 g	
	1	Water	180 ml	220 ml	270 ml	
	2	Butter	2 Tbsp/26g	2 ¾ Tbsp/38g	3 ¼ Tbsp/45g	
	3	Salt	½ Tsp/3g	¾ Tsp/4g	1 Tsp/5g	Put on the corner
	4	Sugar	1 ½ Tbsp/21g	2 Tbsp/26g	3 Tbsp/39g	Put on the corner
	5	High Gluten Flour	1 cups/145g	1 ½ cups/180g	1 ¾ cups/220g	
	6	Whole-wheat	1 cups/145g	1 ½ cups/180g	1 ¾ cups/220g	
	7	Instant Yeast	¾ Tsp/3g	1 Tsp/4g	1 Tsp/4g	Put on the dry flour,don't touch with any liquid.
4. Sweet Bread		Bread	500 g	750 g	1000 g	
	1	Water	120 ml	160 ml	200 ml	
	2	Butter	1 ½Tbsp/20g	2 Tbsp/26g	2 ¼ Tbsp/32g	
	3	Salt	¼ Tsp/2g	¼ Tsp/2g	¼ Tsp/2g	Put on the corner
	4	Egg	1 whole egg/50g	1 whole egg/50g	1 whole egg/50g	
	5	Sugar	2 Tbsp/30g	3 Tbsp/45g	4 ¼ Tbsp/60g	
	6	Skimmed Milk	¼ cup/35g	¼ cup/47g	½ cup/70g	
	7	High Gluten Four	2 ½ cups/290g	3 cups/380g	4 cups/500g	
	8	Instant Yeast	¾ Tsp/3g	1 Tsp/4g	1 Tsp/4g	Put on the dry flour,don't touch with any liquid.

Menus		Ingredient	Volume	Volume	Volume	Remark
5. Gluten Free Bread		Bread	500 g	750 g	1000 g	
	1	Water	140 ml	190 ml	230 ml	
	2	Butter	2 Tbsp/26g	2 ¼ Tbsp/33g	3 Tbsp/39g	
	3	Salt	½ Tsp/3g	¾ Tsp/4g	1 Tsp/5g	Put on the corner
	4	Egg	1 whole egg/50g	1 whole egg/50g	1 whole egg/50g	
	5	Sugar	2 Tbsp/26g	2 ¼ Tbsp/32g	3 Tbsp/39g	Put on the corner
	6	Gluten Free Flour	2 cups/255g	2 ¼ cups/290g	2 ½ cups/325g	
	7	Corn Powder	¼ cup/35g	½cup/70g	¾ cup/115g	Can replace of oat flour
	8	Instant Yeast	¾ Tsp/3g	1 sp/4g	1 Tsp/4g	Put on the dry flour,don't touch with any liquid.
6. Quick Bread		Bread	500 g	750 g	1000 g	
	1	Water	140 ml	190 ml	230 ml	Water temperature 104°F-122°F
	2	Butter	2 Tbsp/26g	2 ¼ Tbsp/33g	3 Tbsp/39g	
	3	Salt	½ Tsp/3g	¾ Tsp/4g	1 Tsp/5g	Put on the corner
	4	Sugar	1 Tbsp/14g	2 Tbsp/26g	3 Tbsp/39g	Put on the corner
	5	High Gluten Flour	2 ¼ cups/290g	2 ¾ cups/360g	3 ½ cups/435g	
	6	Instant Yeast	2 Tsp/8g	2 Tsp/8g	2 Tsp/8g	

7. Cake

- This setting is not suitable for all types of cake, such as Victoria sandwich or those that require going into a hot oven.
- The cake is made according to the recipe in a separate mixing bowl and then baked inside the bread pan.
- Mix the ingredients in a bowl. Line the bottom and sides of the bread pan with baking parchment and pour in the mixture.

1	Plain Flour	2 cups/285 g
2	Baking Soda	1 Tsp
3	Salt	½ Tsp / 3g
4	Butter	½ cup/110 g
5	Granulated Sugar	225 g
6	Free Range Eggs	2
7	Bananas	2
8	Milk	50 ml
9	Vanilla Extract	1 Tsp

- Cream the butter and sugar together until soft then beat in the egg.
- Add the mashed banana milk and vanilla extract.
- Pour wet mixture into the bread maker tin (make sure the stirring paddle is in position.)
- Add the flour, baking soda and salt onto the wet mixture.
- Select programme 14.

8. Dessert

1	Egg (stir slightly)	3 pcs
2	Cooked Rice	1 cup
3	Sugar	¼ cup
4	Raisin	¼ cup
5	Vanillon	1 tsp
6	Cinnamon	1 tsp
7	Milk	2 cups/400ml

Menus		Ingredient	Volume	Volume	Volume	Remark
9. Rice Bread		Bread	500 g	750 g	1000 g	
	1	Water	150 ml	190 ml	240 ml	
	2	Oil	2 Tbsp/26g	2 ½ Tbsp/38g	3 Tbsp/45g	
	3	Salt	½ Tsp/3g	¾ Tsp/4g	1 Tsp/5g	Put on the corner
	4	Egg	1 whole egg/50g	1 whole egg/50g	1 whole egg/50g	
	5	Sugar	2 Tbsp/26g	2 ¼ Tbsp/32g	3 Tbsp/39g	Put on the corner
	6	High Gluten Flour	2 ¼ cups/290g	2 ¾ cups/360g	3 ½ cups/435g	
	7	Cooked Rice	¼ cup	1/3 cup	½ cup	
	8	Instant Yeast	¾ Tsp/3g	1 Tsp/4g	1 Tsp/4g	Put on the dry flour,don't touch with any liquid.
10. Corn Bread		Bread	500 g	750 g	1000 g	
	1	Water	150 ml	190 ml	240 ml	
	2	Oil	2 Tbsp/26g	2 ½ Tbsp/38g	3 Tbsp/45g	
	3	Salt	½ Tsp/3g	¾ Tsp/4g	1 Tsp/5g	Put on the corner
	4	Egg	1 whole egg/50g	1 whole egg/50g	1 whole egg/50g	
	5	Sugar	2 Tbsp/26g	2 ¼ Tbsp/32g	3 Tbsp/39g	Put on the corner
	6	High Gluten Flour	2 ¼cups/290g	2 ¾ cups/360g	3 ½ cups/435g	
	7	Niblet	¼ cup	¼ cup	½ cup	
	8	Instant Yeast	¾ Tsp/3g	1 Tsp/4g	1 Tsp/4g	Put on the dry flour,don't touch with any liquid.

Menus		Ingredient	Volume	Volume	Volume	Remark
11. Purple Bread		Bread	500 g	750 g	1000 g	
	1	Water	150 ml	190 ml	240 ml	
	2	Oil	2 Tbsp/26g	2 ½ Tbsp/38g	3 Tbsp/45g	
	3	Salt	½ Tsp/3g	¾ Tsp/4g	1 Tsp/5g	Put on the corner
	4	Egg	1 whole egg/50g	1 whole egg/50g	1 whole egg/50g	
	5	Sugar	2 Tbsp/26g	2 ¼ Tbsp/32g	3 Tbsp/39g	Put on the corner
	6	High Gluten Flour	2 ¼ cups/290g	2 ¾ cups/360g	3 ½ cups/435g	
	7	Steamed Purple Glutinous rice	¼ cup	¼ cup	½cup	
	8	Instant Yeast	¾ Tsp/3g	1 Tsp/4g	1 ¼ Tsp/5g	Put on the dry flour,don't touch with any liquid.
12. Brown Bread		Bread	500 g	750 g	1000 g	
		Water	180 ml	230 ml	255 ml	
		Cream/Butter	26 g	39 g	45 g	
		Salt	¼ Tsp/2g	½ Tsp/3g	¾ Tsp/4g	Put on the corner
		Blackstrap Molasses	26g	39g	45g	
		Rye Flour	70g	145g	180g	
		Strong White Flour	215g	290g	325g	
		Instant Yeast	1 Tsp/4g	1 ¼ Tsp/5g	1 ¼ Tsp/5g	Put on the dry flour,don't touch with any liquid.

Menus		Ingredient	Volume	Volume	Volume	Remark
13. Porridge	Default: 80mins at 248°F, timer adjustable from 50 mins to 110 mins, per 5 mins.					
14. Sticky Rice	1	Water	250 ml	350 ml	450 ml	With bake and stir functions, soak glutinous rice 30mins before use.
	2	Glutinous	280g	420g	560g	
15. Mix	1	Water	330 ml			
	2	Salt	1 Tsp/6g			Put on the corner
	3	Oil	2 Tbsp			
	4	High Gluten Flour	4 ½ cups/560g			

16. Dough

- The (DOUGH) setting mixes and gives the dough it's first rising before you shape and bake it in your conventional oven.
- Prepare your ingredients according to the recipe and select the correct menu. When your dough is ready, shape it, allow it to rise, and then bake it yourself.
- When the (DOUGH) programme has completed its operation, you may find that the prepared dough is easier to shape if tipped onto a lightly floured board before handling.

1	Water	350 ml	
2	Salt	1 Tsp/5g	Put on the corner
3	Oil	2 Tbsp	
4	Sugar	2 Tbsp/28g	Put on the corner
5	High Gluten Flour	4 ½cups/600 g	
6	Instant Yeast	1 ¼ Tsp/5g	Put on the dry flour, don't touch with any liquid.

Menus		Ingredient	Volume	Volume	Volume	Remark
17. Knead	1	Water	appropriate amount			
	2	Salt	¾ Tsp/4g			
	3	Oil	3 Tbsp			
	4	Hign Gluten Flour	appropriate amount			
18. Rice Wine	1	Glutinous Rice	500g			
	2	Water	appropriate amount			
19. Yogurt	1	milk	1000ml			
	2	lactic Acid Bacteria	100ml			
	3	Sugar	4 ¼ Tbsp/60g			
20. Jam	1	Strawberries Finely Chopped	720ml			
	2	Starch (Dissolve in Water)	¼ cup/80g			
	3	Daster Sugar	1 cup/260g			
	4	Lemon Juice	3 Tbsp/30g			
21. Defrost	default 30mins; adjustable from 0:10 to 2:00, 10mins for each pressing					
22. Stir-fry	1	Peanuts	300g			
	1	Default 0:30; adjustable from 0:01 to 2:00,+/- 1min for each short-pressing, +/- 10mins for each long-pressing				
23. Ferment & Bake	1	Default 1:50; ferment time:60mins, baking time:50mins; crust shade button is available				
24. Bake	1	00:30; adjust baking temperature by pressing crust button: 212°F (light); 302°F (medium); 392°F(dark), default 302°F.				
25. DIY	1	Press this button enter to DIY menu, in this menu, user can set each process time e.g. knead,ferment,bake. suitable for DIY bread				

RAZORRI

support@razorri.com
www.razorri.com