Item Number: A03617

WARNING (To reduce the risk of fire, electric shock, or injury to persons):

1. We suggest installation by a **licensed electrician**.
2. Please read the instruction carefully and save it as you may need it at later time.
3. Before you start, **NEVER** attempt any work without shutting off the electricity until the work is done. A). Go to the main fuse, or circuit breaker, box in your home. Place the main power switch in the "**OFF**" position. B). Place the wall switch in the "**OFF**" position.
4. Mounting surface should be clean, dry, flat, strong enough and 1/4" larger than the canopy on all side. Any gaps between the mounting surface and canopy exceeding 3/16" should be corrected as required.
5. Make sure that the ceiling or wall can stand the weight of the lamp before fixture.
6. Make sure the voltage you are using is **120V**. The maximum wattage is **60W** per bulb.
7. Keep the lamp away from acidic and basic objects in case of damaging the surface of the lamp.
8. When replacing bulb, you should turn off or unplug the lamp and you must wait until it is cool as bulbs get hot quickly.
9. The safety instructions appearing in this manual are not meant to cover all possible conditions that may occur. It must be understood that common sense, caution and care must be used with any electrical products.

IMAGE FOR FINISHED PRODUCT:

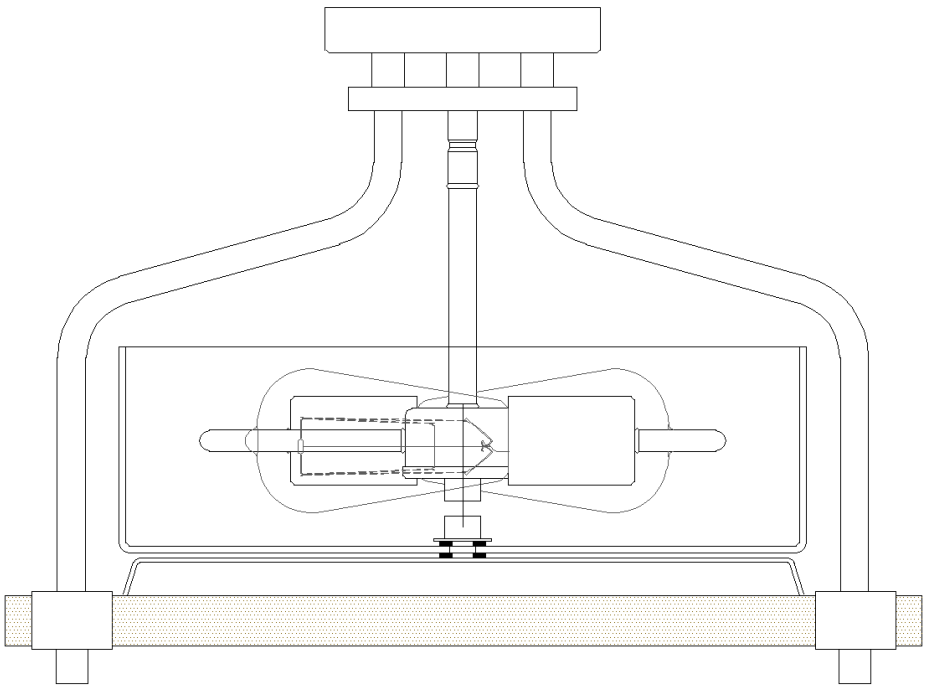

TOOLS REQUIRED (NOT INCLUDED):

Before doing assembly and installation please prepare the needed tools as below picture

	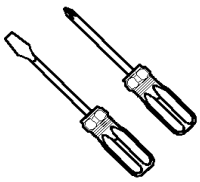	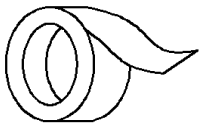	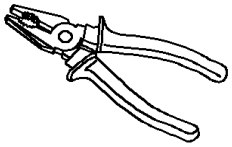	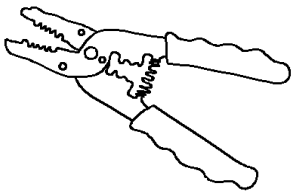
Ladder	Phillips head.flat blade screwdriver	Electrical tape	Pliers	Wire cutter/Stripper

PARTS TYPE & QTY INCLUDING:

(B) Round mounting plate (1)

(C) Green ground screw (1)

(E) Canopy (1)

(F) Tube (1)

(G) Knob ball (2)

(H) Arm (2)

(I) Fixture loop assembly (1)

(J) Glass shade (1)

(K) Ball nut (1)

(L) Iron washer (1)

(M) Plastic washers (2)

(N) Square tube (1)

(O) Knob ball (2)

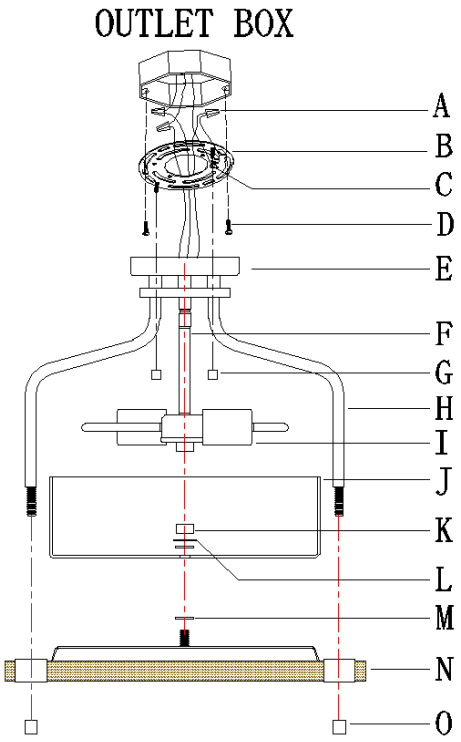

ACCESSORIES & QTY ENCLOSED:

(A)Plastic wire connector (3)

(D) Mounting screw (2)

ASSEMBLY & INSTALLATION INSTRUCTIONS:

1. Carefully remove the fixture from the carton and check that all parts and accessories are included as shown in the above illustration
2. **Turn off power**

   Before you start to make installation, NEVER attempt any work without shutting off the electricity until the work is done. A). Go to the main fuse, or circuit breaker, box in your home. Place the main power switch in the "OFF" position. B). Place the wall switch in the"OFF" position
3. Unscrew the knobs (G) from the mounting plate (B).

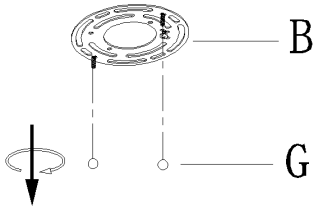

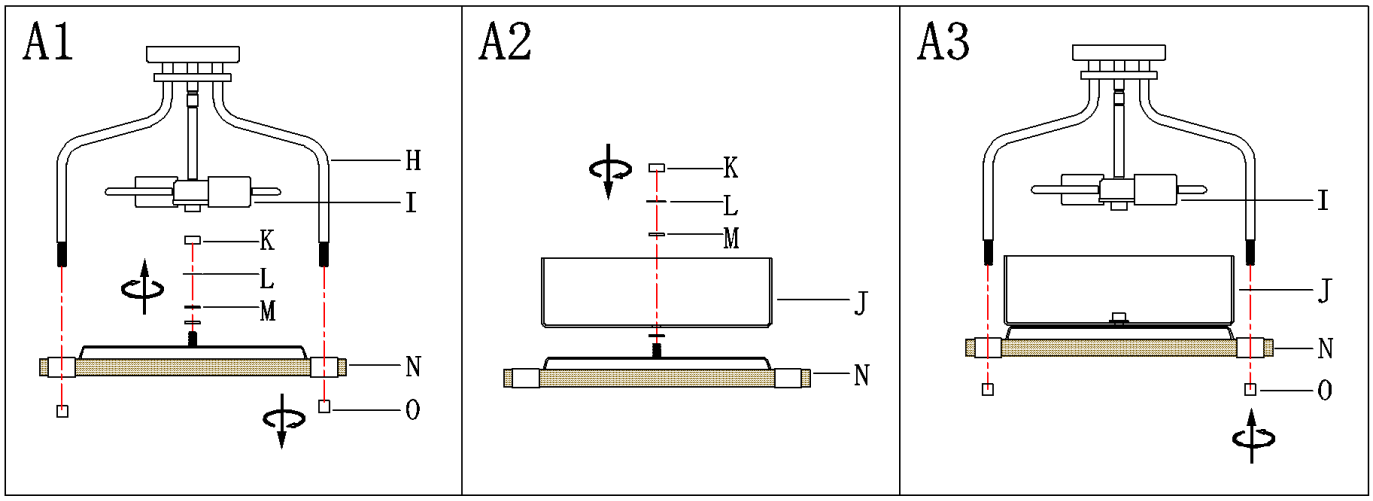

4. A1) Unscrew the knobs (O) and square tube (N) from the arms (H).
Unscrew ball nut (K), iron washer (L) and Plastic washers (M) from square tube (N).

A2) Fix glass shade (J) on square tube (N) with ball nut (K), iron washer (L) and plastic washer (M) and tighten ball nut (K) until fixed.

A3) Fix square tube (N) on arms (I) with knobs (O) and tighten knobs (O) until fixed.

5. Attach the mounting plate (B) to outlet box with the mounting screws(D).

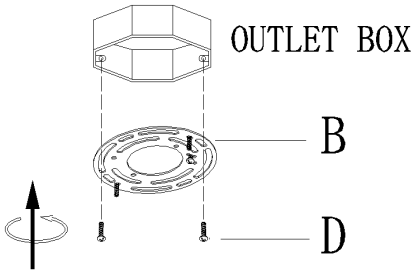

6. Make wire connections

Connect wires as below wires connecting shown. **TAKE NOTE OF YOUR COLOR OF FIXTURE ,NEVER CONNECT**

WIRES TO GROUND WIRES

Connect ground wire according to below chart

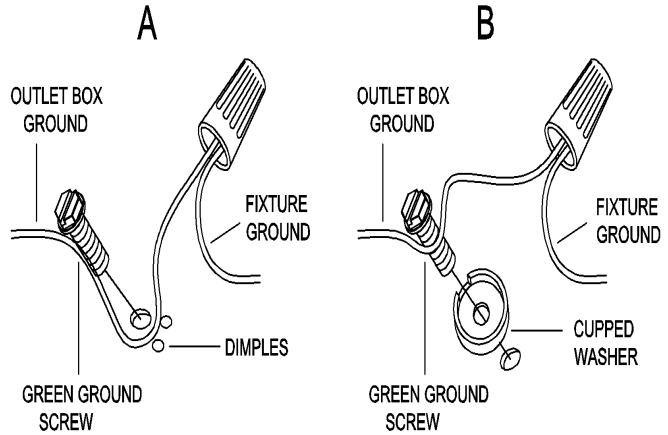

Connect wires according to below chart

Connect Black or Red Supply Wire to:	Connect White Supply Wire to:
Black	White
*Parallel cord (round & smooth)	*Parallel cord (square & ridged)
Clear,Brown,Gold or Black without tracer	Clear,Brown,Gold or Black with tracer
Insulated wire (other than green) with copper conductor	Insulated wire (other than green) with silver conductor

*Note: When parallel wires (SPT I & SPT II) are used. The neutral wire is square shaped or ridged and the other wire will be round in shape or smooth (see illus.)

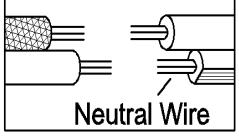

Twist plastic wire connector(A) until wires are tightly joined together,then carefully stuff all wires into the outlet box

7. Raise canopy (E) to ceiling and secure canopy (E) in place by tightening knobs (G) onto the threaded nipple on mounting plate.

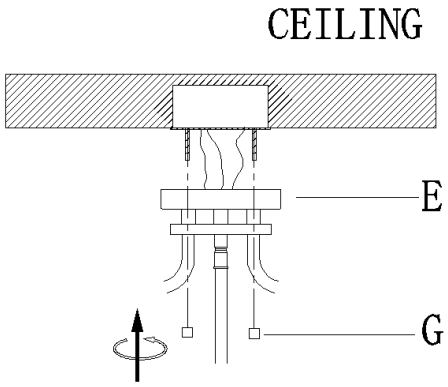

8. Install the bulb (not included) (Please do not exceed the maximum capacity recommended on the socket.)

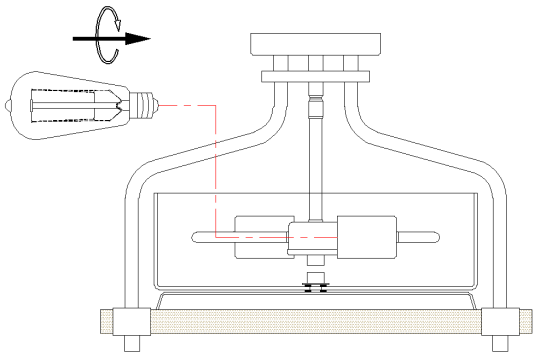

9. Check everything is already installed properly, then you could turn on the light. Enjoy !

CLEANING

To clean, wipe fixture with a soft cloth. Clean glass with a mild soap. Do not use abrasive materials such as scouring pads or powders, steel wool or abrasive paper.

ORDERING PARTS

Keep this sheet for future reference, and in case you need to order replacement parts. All parts for this fixture can be ordered from place of purchase. Be sure to use exact wording from illustration when ordering parts.