Anlage zu / Attachment to
87-eKFV-1017/20-00

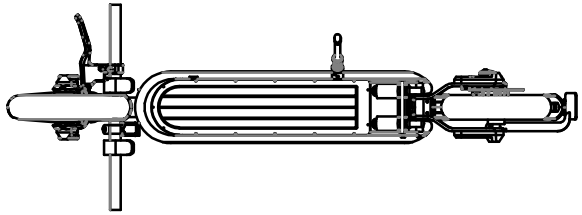

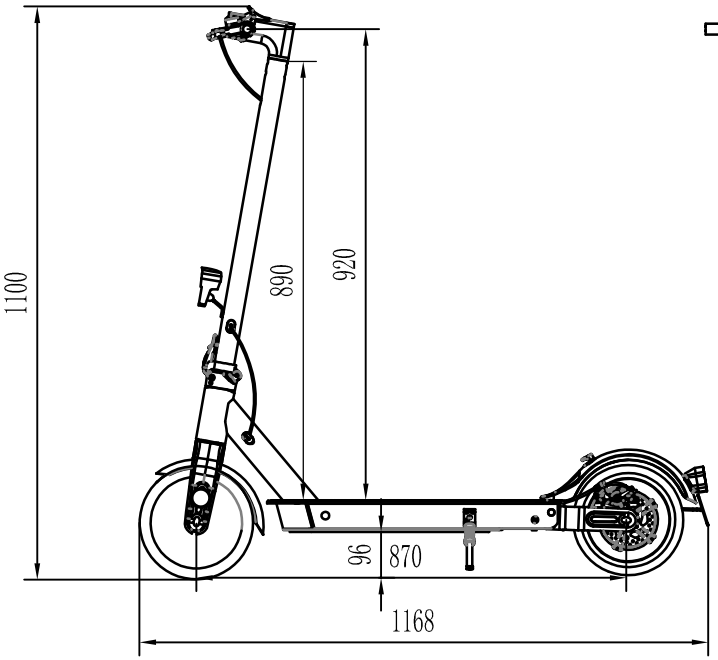

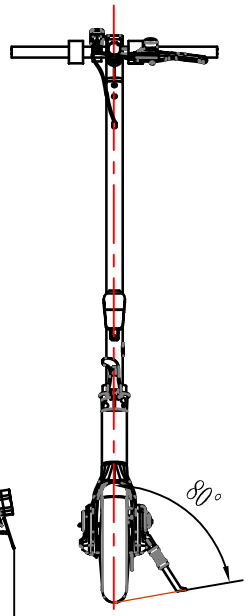

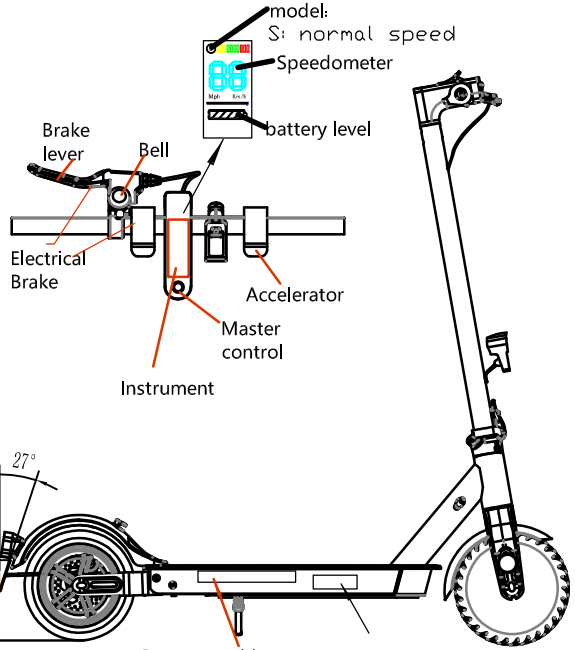

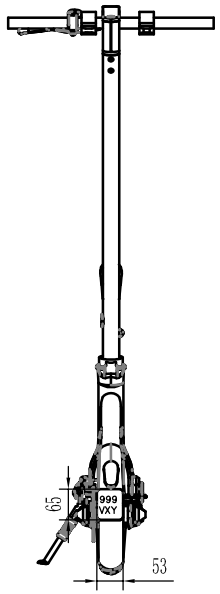

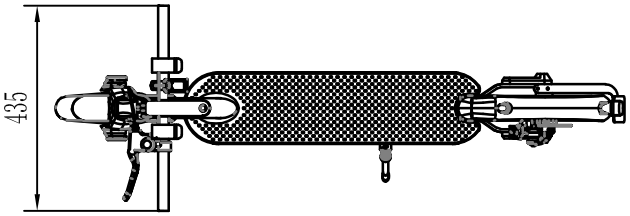

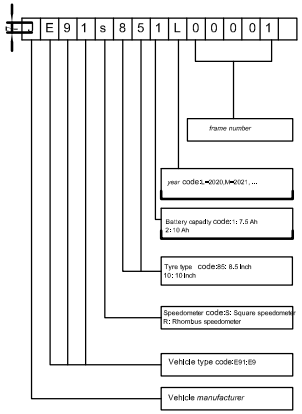

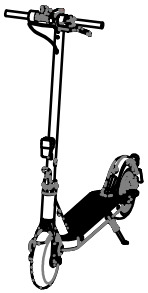

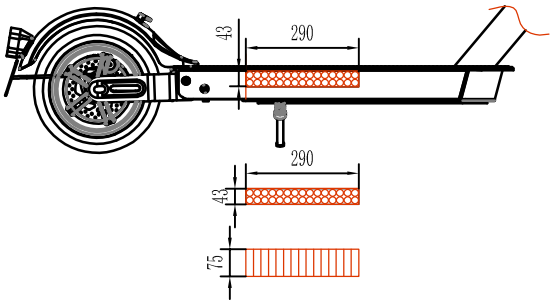

Make: Dongguan CHY Battery
Technology Co., Ltd.
Type : CHY3675
Capacity : 36V7.5Ah

Version 1:
8.5 inch tyre
7.5ah battery
square speedometer

Hersteller / manufacturer:	Verantwortlicher / responsible:	Zeichnungsnr. / drawing no.:	
ZAMELUX GREEN S.L.	Ying junjie	13.3./2.1	
	Titel / title: 13.3./2.1. Zeichnung des gesamten Fahrzeugs / drawing of the whole vehicle	Material / material:	
		Maßstab / scale: 1:10	Blatt / page: 1/3

Anlage zu / Attachment to
87-eKFV-1017/20-00

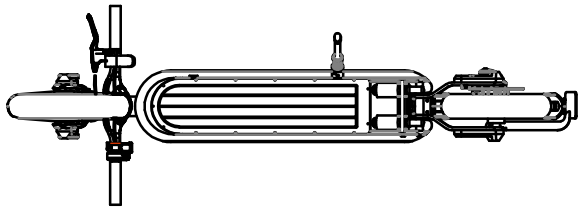

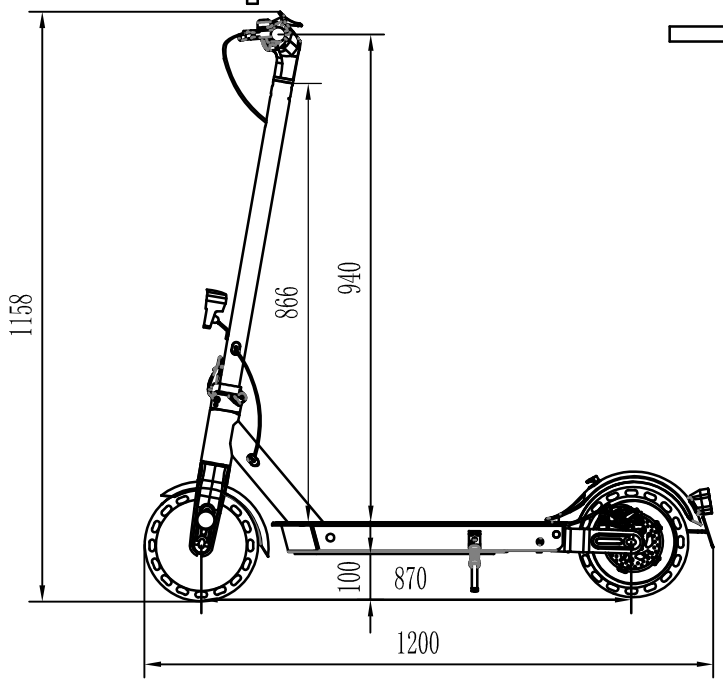

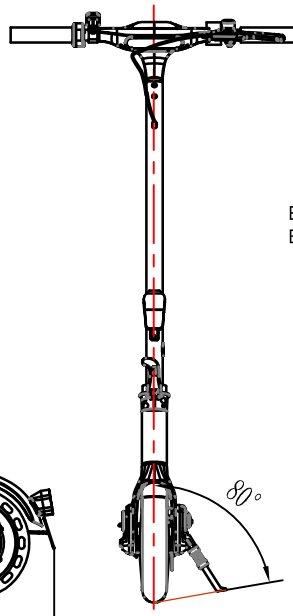

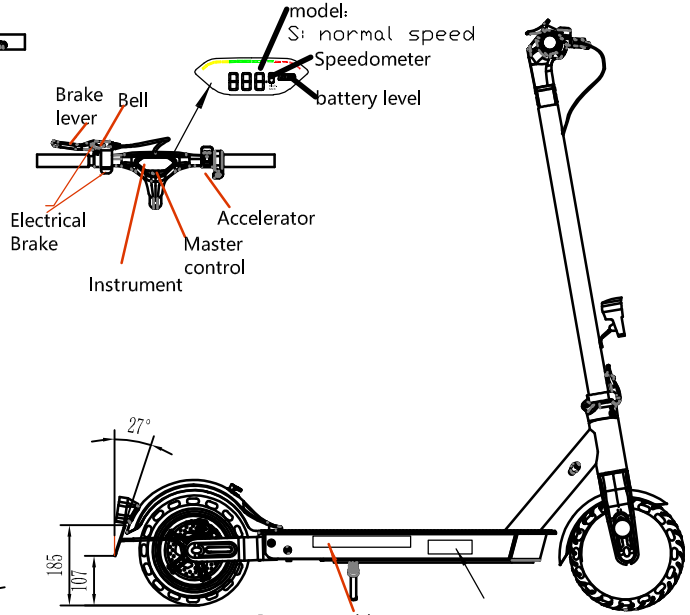

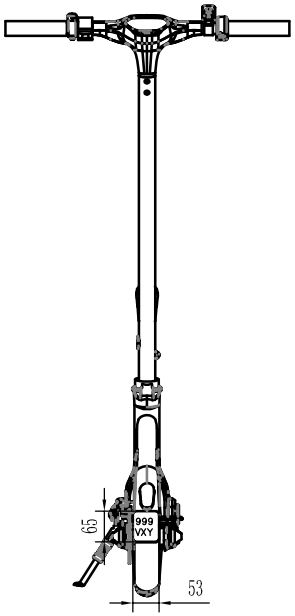

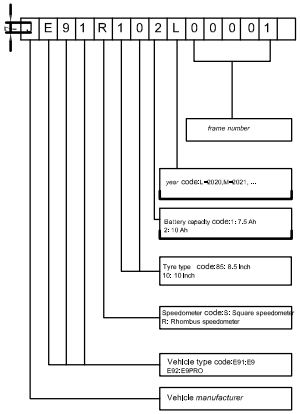

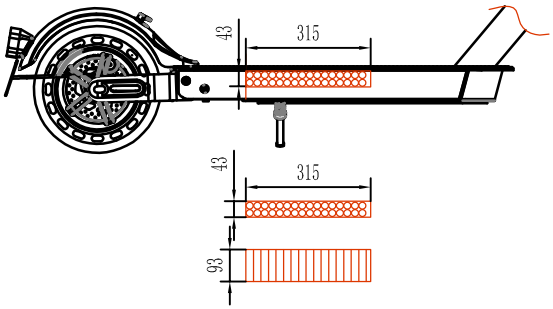

Make: Dongguan CHY Battery Technology Co., Ltd.
Type : CHY3610
Capacity : 36V10Ah

Version 2:
10 inch tyre
10ah battery
rhombus speedometer

Hersteller / manufacturer:	Verantwortlicher / responsible:	Zeichnungsnr. / drawing no.:	
ZAMELUX GREEN S.L.	Ying junjie	13.3./2.1	
	Titel / title: 13.3./2.1. Zeichnung des gesamten Fahrzeugs / drawing of the whole vehicle	Material / material:	
		Maßstab / scale: 1:10	Blatt / page: 2/3

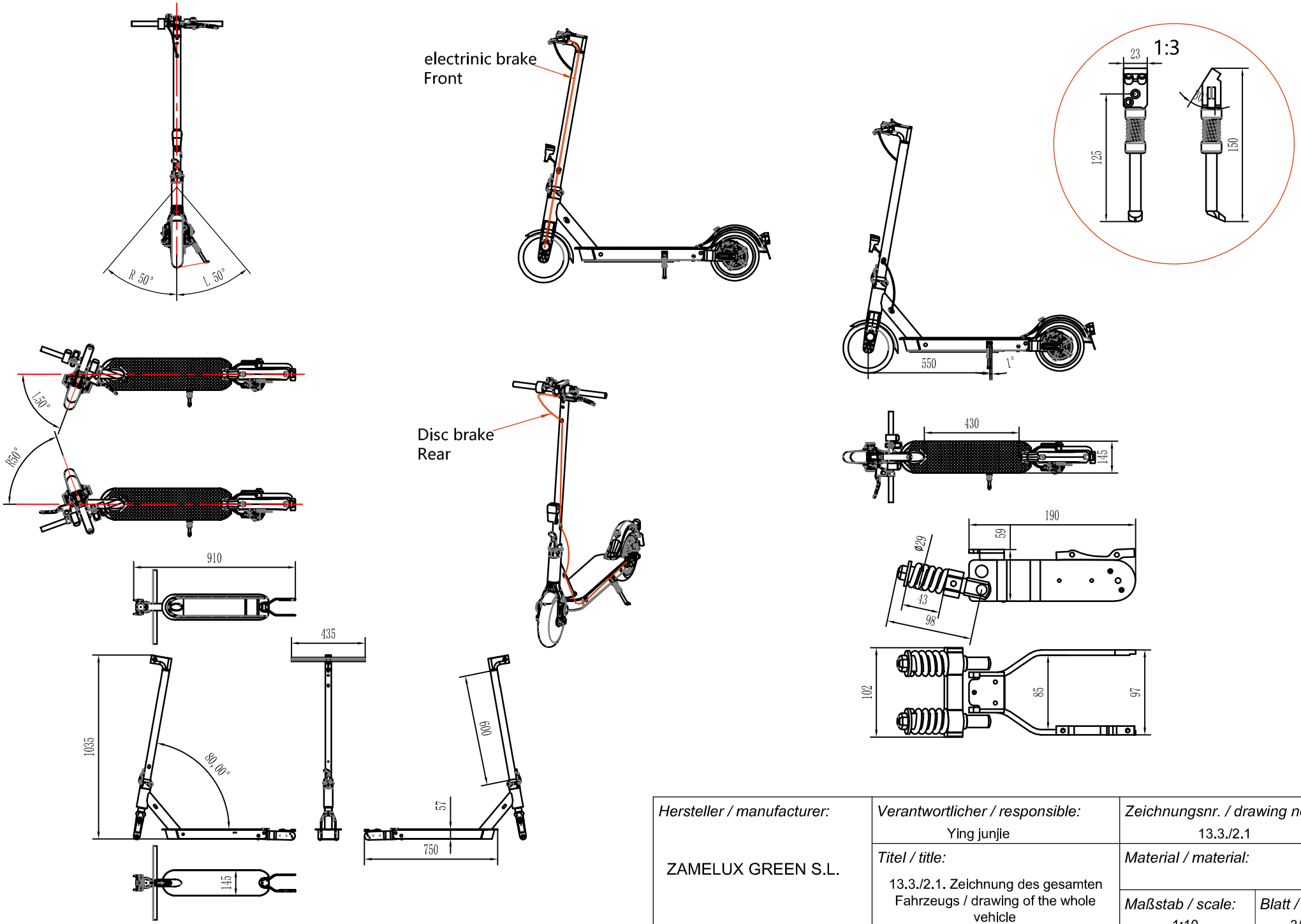

Hersteller / manufacturer:	Verantwortlicher / responsible:	Zeichnungsnr. / drawing no.:	
ZAMELUX GREEN S.L.	Ying junjie	13.3./2.1	
	Titel / title: 13.3./2.1. Zeichnung des gesamten Fahrzeugs / drawing of the whole vehicle	Material / material:	
		Maßstab / scale: 1:10	Blatt / page: 3/3

Anlage zu / Attachment to
87-eKFV-1017/20-00

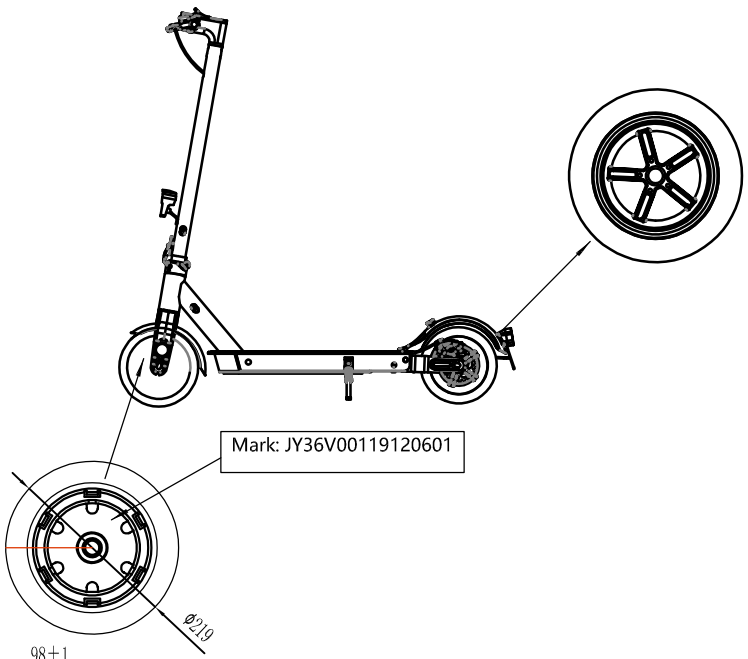

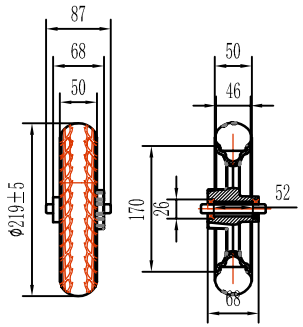

Hub Make: Zhejiang Weite motor co.ltd
Hub Type: JY01
Tyre Make : Jiangxi Deyou Technology Co., Ltd
Tyre Type : DY-052-01

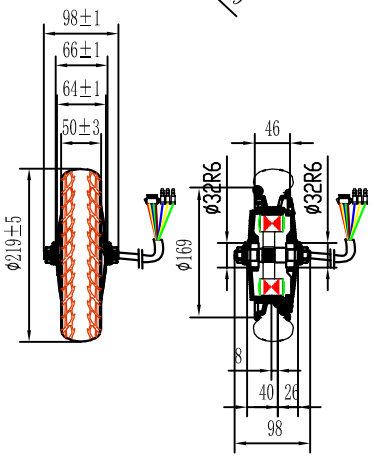

Motor make: Zhejiang Weite motor co.ltd
Hub Type: JY36V00119120601
Tyre Make : Jiangxi Deyou Technology Co., Ltd
Tyre Type : DY-052-01

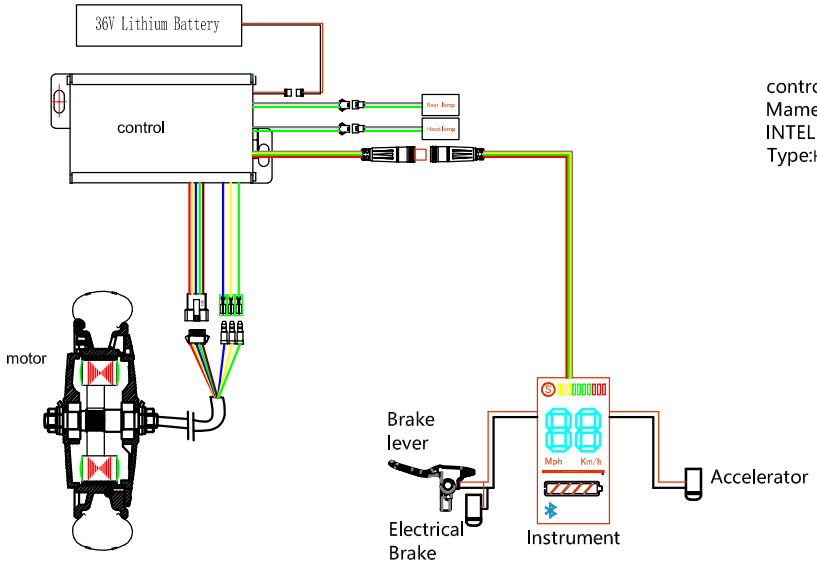

control 1:
Mame: SHENZHEN ZYDTECH
INTELLIGENT TECHNOLOGY CO.LTD
Type:HW9027-ZYD009-E9

Version 1:
8.5 inch tyre
7.5ah battery
square speedometer

Hersteller / manufacturer: ZAMELUX GREEN S.L.	*Verantwortlicher / responsible:* Ying junjie	*Zeichnungsnr. / drawing no.:* 13.3./3
	Titel / title: 13.3./3. Zeichnung der Antriebsmaschine / drawing of propulsion engine (longitudinal / cross section)	*Material / material:* Aluminium,copper
		Maßstab / scale: 1:6 — *Blatt / page:* 1/2

Anlage zu / Attachment to
87-eKFV-1017/20-00

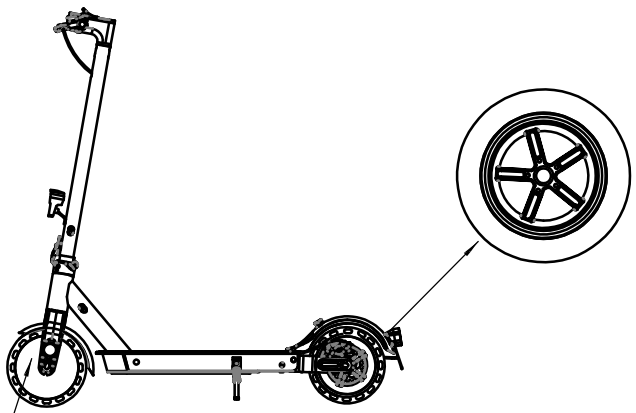

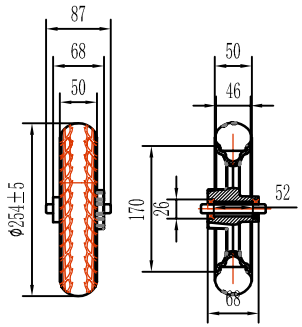

Hub Make: Zhejiang Weite motor co.ltd
Hub Type: JY01
Tyre Make : Jiangxi Deyou Technology Co., Ltd
Tyre Type : DY-031-01

Mark: JY36V00119120602

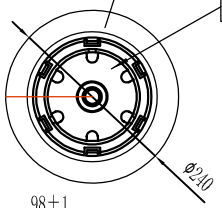

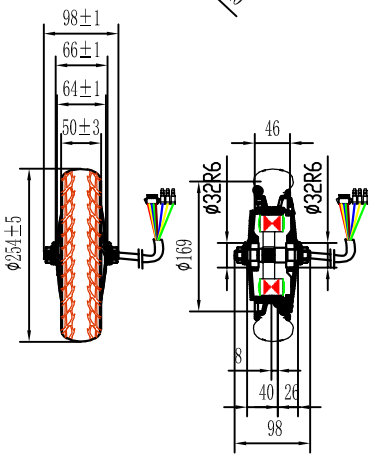

Motor make: Zhejiang Weite motor co.ltd
Hub Type: JY36V00119120601
Tyre Make : Jiangxi Deyou Technology Co., Ltd
Tyre Type : DY-031-01

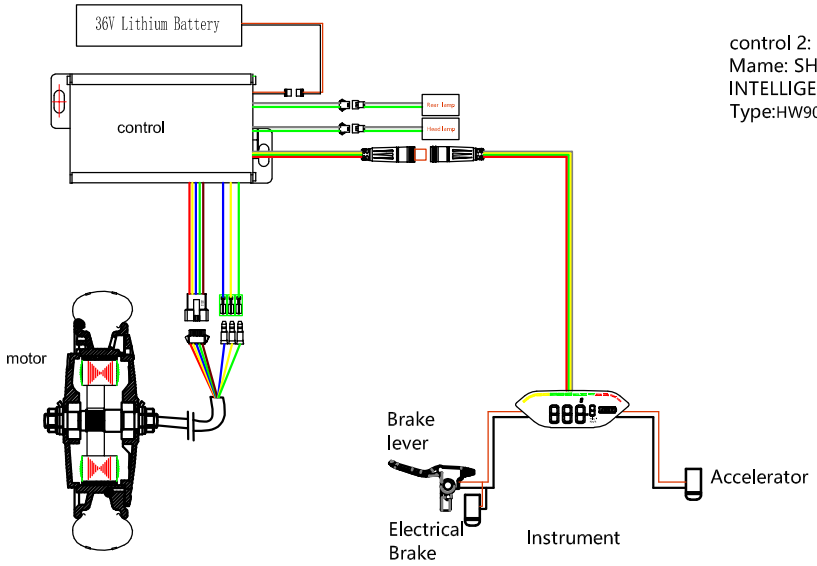

control 2:
Mame: SHENZHEN ZYDTECH
INTELLIGENT TECHNOLOGY CO.LTD
Type:HW9027-ZYD009-E9T

Version 2:
10 inch tyre
10ah battery
rhombus speedometer

Hersteller / manufacturer:	*Verantwortlicher / responsible:* Ying junjie	*Zeichnungsnr. / drawing no.:* 13.3./3	
ZAMELUX GREEN S.L.	*Titel / title:* 13.3./3. Zeichnung der Antriebsmaschine / drawing of propulsion engine (longitudinal / cross section)	*Material / material:* Aluminium,copper	
		Maßstab / scale: 1:6	*Blatt / page:* 2/2

Anlage zu / Attachment to
87-eKFV-1017/20-00

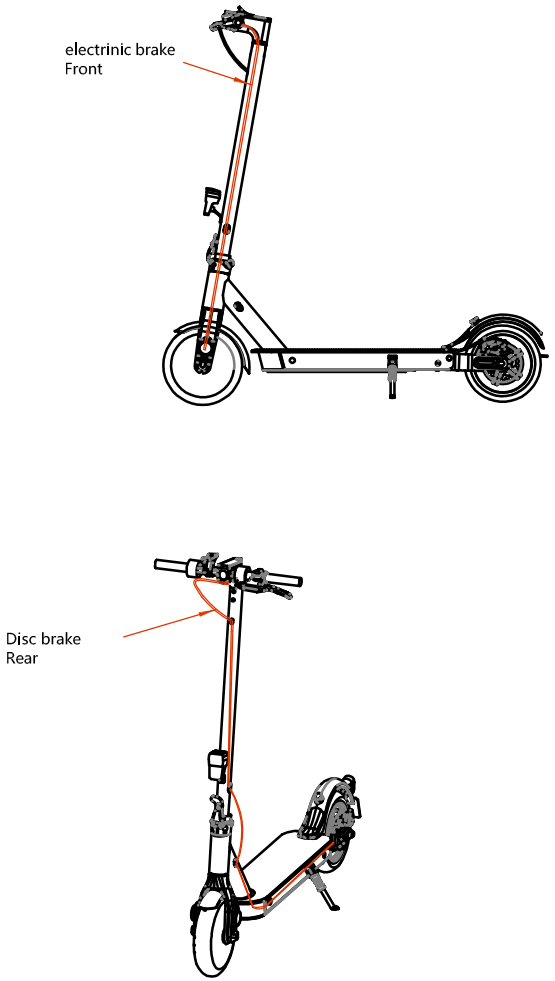

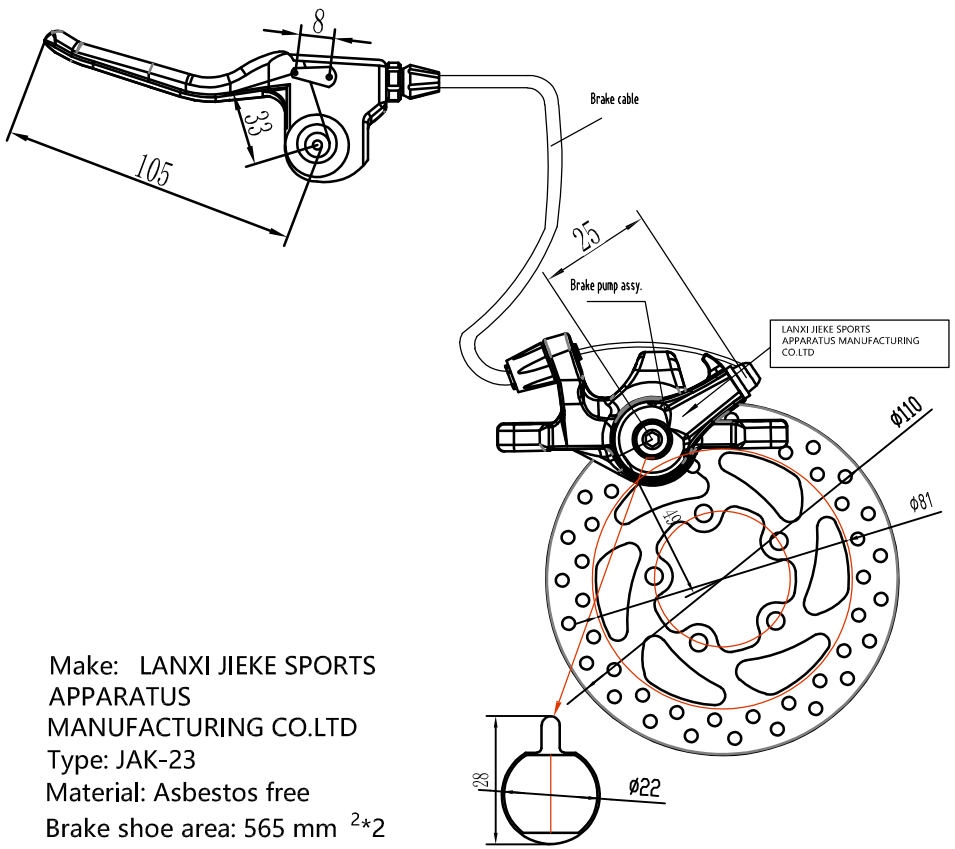

Make: LANXI JIEKE SPORTS APPARATUS MANUFACTURING CO.LTD
Type: JAK-23
Material: Asbestos free
Brake shoe area: 565 mm ^{2}*2

Hersteller / manufacturer:	Verantwortlicher / responsible:	Zeichnungsnr. / drawing no.:	
	Ying junjie	13.3./8.	
ZAMELUX GREEN S.L.	Titel / title: 13.3./8. Schematische Darstellung der Bremsanlage / *schematic diagram of the brake system*	Material / material:	
		Maßstab / scale: 1:4	Blatt / page: 1/1

Version 1:
8.5 inch tyre
7.5ah battery
square speedometer

Hersteller / manufacturer:	*Verantwortlicher / responsible:*	*Zeichnungsnr. / drawing no.:*	
	Ying junjie	13.3./9.1	
ZAMELUX GREEN S.L.	*Titel / title:*	*Material / material:*	
	13.3./9.1. Fotos einer repräsentativen Fahrzeugausführung / Photos of a representative vehicle	*Maßstab / scale:*	*Blatt / page:*
		1:10	1/2

Version 2:
10 inch tyre
10ah battery
rhombus speedometer

Hersteller / manufacturer:	*Verantwortlicher / responsible:* Ying junjie	*Zeichnungsnr. / drawing no.:* 13.3./9.1	
ZAMELUX GREEN S.L.	*Titel / title:* 13.3./9.1. Fotos einer repräsentativen Fahrzeugausführung / Photos of a representative vehicle	*Material / material:*	
		Maßstab / scale: 1:10	*Blatt / page:* 2/2

Anlage zu / Attachment to
87-eKFV-1017/20-00

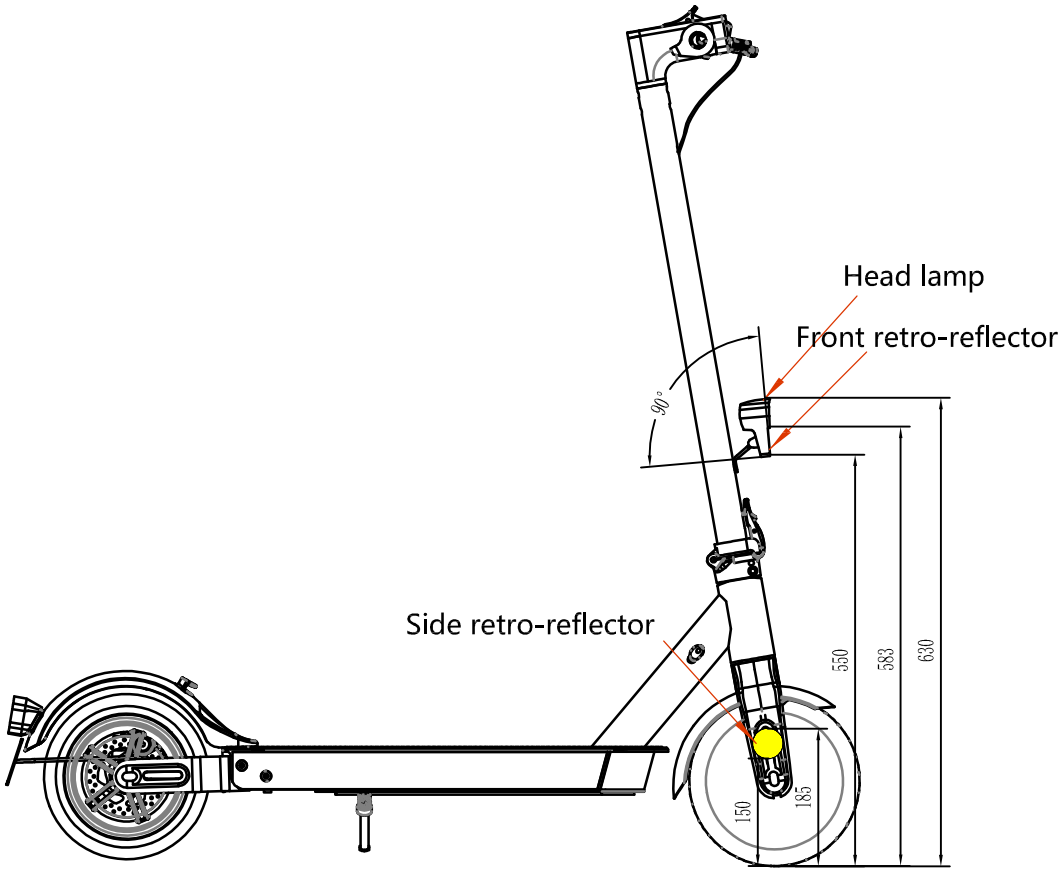

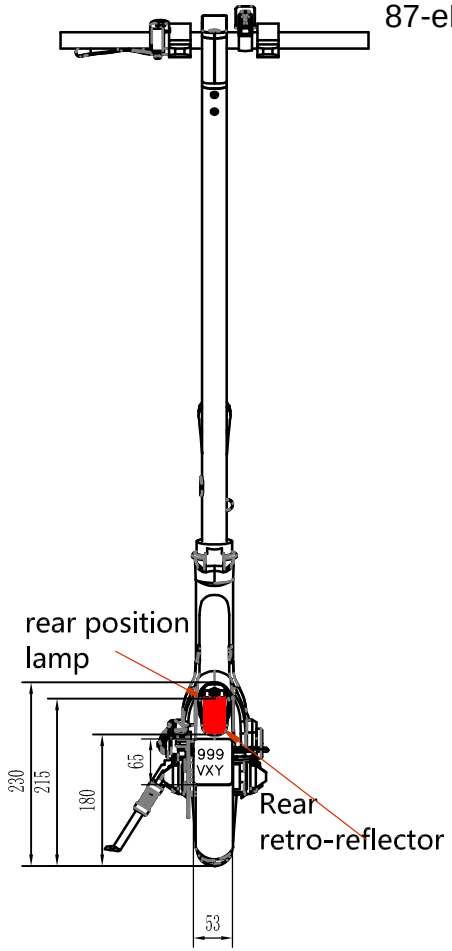

Head lamp
make: Sate-Lite ; type: G1; Approval No.: K 1220

Rear lamp
make: Sate-Lite ; type: M4; Approval No.: K 1634

Front retro-reflector
make: Sate-Lite ; type: G1; Approval No.: K 1220/IA02 E8 8383

Rear retro-reflector
make: Sate-Lite ; type: M4; Approval No.: K 1634/IA E8 02 9960

Side retro-reflector
make: K-Lite ; type: KM106; Approval No.:E4-3R-0224744

Version 1:
8.5 inch tyre
7.5ah battery
square speedometer

Hersteller / manufacturer:	*Verantwortlicher / responsible:* Ying junjie	*Zeichnungsnr. / drawing no.:* 13.3./10	
ZAMELUX GREEN S.L.	*Titel / title:* 13.3./10. Schematische Darstellung des gesamten Fahrzeugs mit Angaben der Abmessungen und Maßangaben zur Beleuchtung / Drawing of the whole vehicle with dimension of the vehicle and the lighting devices	*Material / material:*	
		Maßstab / scale: 1:20	*Blatt / page:* 1/2

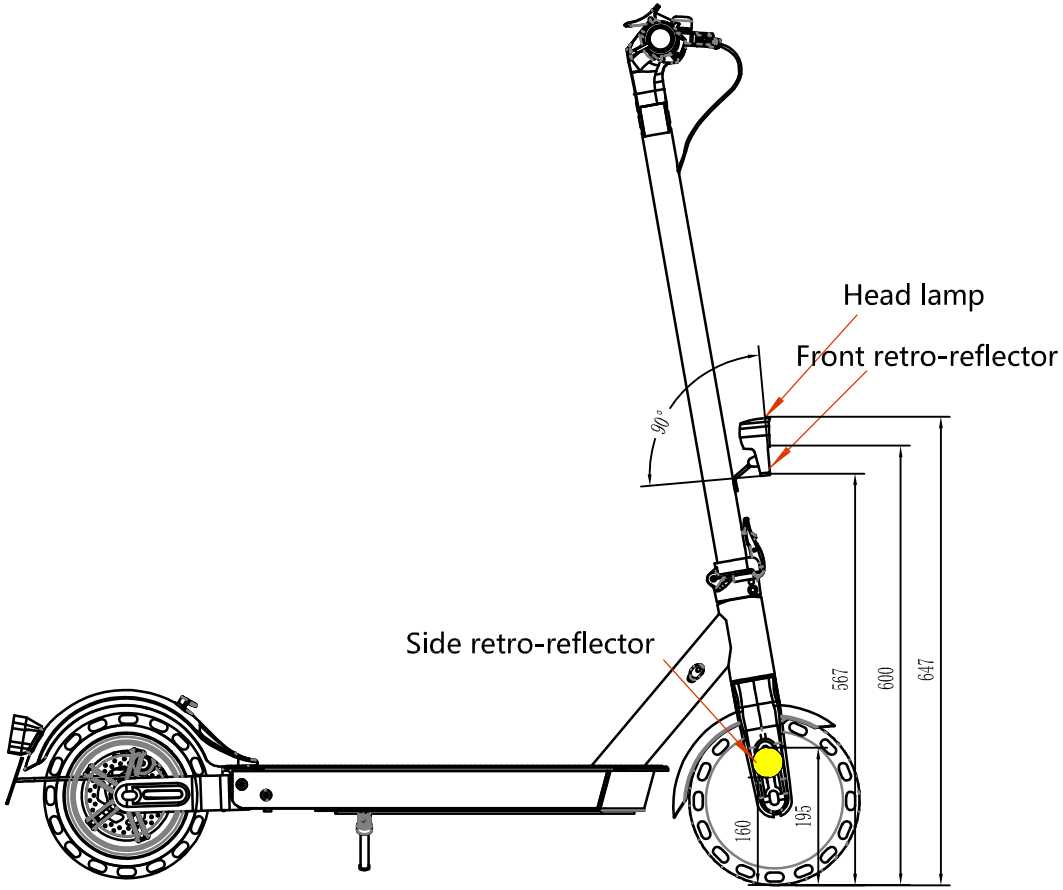

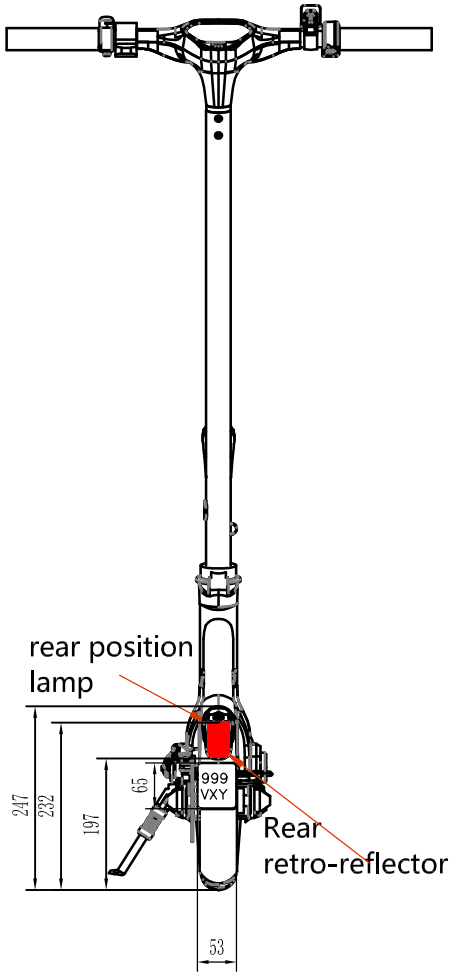

Version 2:
10 inch tyre
10ah battery
rhombus speedometer

Head lamp
make: Sate-Lite ; type: G1; Approval No.: K 1220

Rear lamp
make: Sate-Lite ; type: M4; Approval No.: K 1634

Front retro-reflector
make: Sate-Lite ; type: G1; Approval No.: K 1220/IA02 E8 8383

Rear retro-reflector
make: Sate-Lite ; type: M4; Approval No.: K 1634/IA E8 02 9960

Side retro-reflector
make: K-Lite ; type: KM106; Approval No.:E4-3R-0224744

Hersteller / manufacturer:	*Verantwortlicher / responsible:* Ying junjie	*Zeichnungsnr. / drawing no.:* 13.3./10	
ZAMELUX GREEN S.L.	*Titel / title:* 13.3./10. Schematische Darstellung des gesamten Fahrzeugs mit Angaben der Abmessungen und Maßangaben zur Beleuchtung / Drawing of the whole vehicle with dimension of the vehicle and the lighting devices	*Material / material:*	
		Maßstab / scale: 1:20	*Blatt / page:* 2/2

TEST REPORT

according to EN15194:2018 clause 4.2.3

BATTERY SAFETY

Structure of the Test Report

Item No.
0. General information
1. Tested vehicle(s) / object(s)
2. Test record
3. List of appendices
4. Statement of conformity

The Test Report shall be reproduced and published in full by the client only. It shall however be reproduced partially with the written permission of the Testing Laboratory only.

0. General information

0.1.	Make (trade name of the manufacturer)	: ZAMELUXGREEN.S.L
0.2.	Type	: E9
0.3.	Category of vehicle	: Elektrokleinstfahrzeug
0.4.	Name and address of the manufacturer	: ZAMELUXGREEN.S.L c/ Sant Adrià, 89-91 Nave C, 08030 Barcelona Spain
0.5.	No. of the information document	: ---
	-Date of issue	: ---
	-Date of last change	: ---

1. Tested ~~vehicle(s)~~/object(s)

1.1. Description

1.1.1.	~~Vehicle~~/ object	: Battery
	Trade name	: Dongguan CHY Battery Technology Co., Ltd.
	Type / variant(s) / version(s)	: CHY3675/ --- / ---
	Identification number	: N.A.
1.1.2.	Condition of vehicle(s)	: New
1.2.	Worst case selection	: Only one variant/ version, so no worst case need to be selected.
1.3.	Remark	: n.a.

2. Test record

2.1.	Equipment for measuring and testing	: The test facilities / measurement equipment used were in compliance with the test requirements.
2.1.1.	Specifications for the test site	: Not applicable
2.1.2.	Subcontracting	: Not applicable
2.2.	Test results	: See Appendix 1
2.2.1.	Test results referring to measurements	: All measurement results are listed and referred to the respective limit(s) with judgment.
2.2.2.	Attributive tests	: Not applicable
2.2.3.	Alternative test provisions	: Not applicable
2.3.	Additional information	: The results of the test refer exclusively to the object(s) mentioned under point 1. of this report.
	Test site	: Wujiang Laboratory Of Battery Products, Suzhou, P.R. China
	Test date	: January 17, 2020
2.4.	Remarks	: ---

3. List of Appendices

L	Product description	: Pages 5 - 6
0	List of modifications	: Page 7
1	Test minutes	: Pages 8 - 9

4. Statement of conformity

The in point 0.5. mentioned information document and the type described in that comply with the requirements mentioned on page 1.

With regard to the required level of performance to be achieved, the tested items were representative for the type to be approved (see point 1.2).

The mentioned test results refer to the vehicle(s)/object(s) described under point 1.1 of this report.

Engineering Center, Shanghai, August 27, 2020
LJZ/LS

Liangjun Zhang
Expert Technical Service

Produktbeschreibung **Appendix L**
Product description

1	**Produktdetails** *Product details*	Lithium battery pack for electric scooter, Ratings: 36VDC, 7.50Ah
2	**Maße / Gewicht** *Dimensions / Weight*	Weight Approx. 1.50 kg L*W*H (max. Approx.)= 290*75*43 mm
3	**Bedienelemente** *Operating elements*	/
4	**Ausstattung / Zubehör** *Equipment / Accessories*	/
5	**Verwendete Materialien** *Used materials*	Shell: ABS Cell: Ternary lithium
6	**Sonstiges** *Other*	Model of battery: *CHY3675*, Manufacturer: *Dongguan CHY Battery Technology Co., Ltd.* Model of charger: *FY0634201500*, Manufacturer: *Shenzhen Fuyuandian Power Co., Ltd.* Rating: *Input 100-240VAC, 1.8A, 50/60Hz; Output 42VDC 1.5A.* Model of cell: *18650.*

Vehicle Type : E9
Manufacturer : ZAMELUXGREEN.S.L

Test photos:

List of modifications Appendix 0

Correction of : - ---

Modification of : - ---

Addition of : - ---

Deletion of : - ---

Test minutes of Battery **Appendix 1**

0. Test condition

0.1.	Test place	:	Suzhou, P.R.China
1.	Test facilities	:	The test equipment used was in compliance with the requirements of the regulation.
2.	Test Vehicle(s)		
2.1	Type	:	E9
	Variant	:	---
	Version	:	1
2.2	Identification Number	:	---
2.3	Make of Battery	:	Dongguan CHY Battery Technology Co., Ltd.
2.3.1	Type of Battery	:	CHY3675
2.4	Make of Power controller	:	SHENZHEN ZYDTECH INTELLIGENT TECHNOLOGY CO., LTD.
2.4.1	Type of Power controller	:	HW9027-ZYD009-E9
2.5.	Make of Charger	:	Shenzhen Fuyuandian Power Co., Ltd.
2.5.1	Type of Charger	:	FY0634201500

3. Test requirements

a) The EPAC and batteries pack shall be designed in order to avoid risk of fire and mechanical deterioration resulting from abnormal use. Compliance is checked by the test described in 4	:	Confirmed
b) During the test the EPAC and the batteries shall not emit flames, molten metal or poisonous ignitable gas in hazardous amounts and any enclosure shall show no damage that could impair compliance with this European Standard. Safety and compatibility of the battery/charger combination shall be ensured, according to the manufacturer's specifications.	:	Confirmed

c) The battery terminals shall be protected against creating an accidental short circuit.	:	Confirmed
d) An appropriate care shall be taken to ensure that the batteries are protected against overcharging. An appropriate overheating and short circuit protection device shall be fitted.	:	Confirmed

4. Test method

a) Battery terminals are short-circuited with the batteries in a fully charged condition.	:	Pass
b) Motor terminals are short-circuited; all commands are in “ON” position, while the batteries are fully charged.	:	Pass
c) The EPAC is operated with the electric motor or drive system blocked until the motor torque stops or the battery is fully discharged.	:	Pass
d) The battery is charged for double the recommended charging period or for 24 h whichever is greater	:	Pass

Vehicle Type : E9
Manufacturer : ZAMELUXGREEN.S.L

TEST REPORT

according to EN15194:2018 clause 4.2.3

BATTERY SAFETY

Structure of the Test Report

Item No.
0. General information
1. Tested vehicle(s) / object(s)
2. Test record
3. List of appendices
4. Statement of conformity

The Test Report shall be reproduced and published in full by the client only. It shall however be reproduced partially with the written permission of the Testing Laboratory only.

0. General information

0.1.	Make (trade name of the manufacturer)	: ZAMELUXGREEN.S.L
0.2.	Type	: E9
0.3.	Category of vehicle	: Elektrokleinstfahrzeug
0.4.	Name and address of the manufacturer	: ZAMELUXGREEN.S.L c/ Sant Adrià, 89-91 Nave C, 08030 Barcelona Spain
0.5.	No. of the information document	: ---
	-Date of issue	: ---
	-Date of last change	: ---

1. Tested ~~vehicle(s)~~/object(s)

1.1. Description

1.1.1.	~~Vehicle~~/ object	: Battery
	Trade name	: Dongguan CHY Battery Technology Co., Ltd.
	Type / variant(s) / version(s)	: CHY3610/ --- / ---
	Identification number	: N.A.
1.1.2.	Condition of vehicle(s)	: New
1.2.	Worst case selection	: Only one variant/ version, so no worst case need to be selected.
1.3.	Remark	: n.a.

2. Test record

2.1.	Equipment for measuring and testing	: The test facilities / measurement equipment used were in compliance with the test requirements.
2.1.1.	Specifications for the test site	: Not applicable
2.1.2.	Subcontracting	: Not applicable
2.2.	Test results	: See Appendix 1
2.2.1.	Test results referring to measurements	: All measurement results are listed and referred to the respective limit(s) with judgment.
2.2.2.	Attributive tests	: Not applicable
2.2.3.	Alternative test provisions	: Not applicable
2.3.	Additional information	: The results of the test refer exclusively to the object(s) mentioned under point 1. of this report.
	Test site	: Wujiang Laboratory Of Battery Products, Suzhou, P.R. China
	Test date	: January 17, 2020
2.4.	Remarks	: ---

3. List of Appendices

L	Product description	: Pages 5 - 6
0	List of modifications	: Page 7
1	Test minutes	: Pages 8 - 9

4. Statement of conformity

The in point 0.5. mentioned information document and the type described in that comply with the requirements mentioned on page 1.

With regard to the required level of performance to be achieved, the tested items were representative for the type to be approved (see point 1.2).

The mentioned test results refer to the vehicle(s)/object(s) described under point 1.1 of this report.

Engineering Center, Shanghai, August 27, 2020
LJZ/LS

Liangjun Zhang
Expert Technical Service

Produktbeschreibung **Appendix L**
Product description

1	**Produktdetails** *Product details*	Lithium battery pack for electric scooter, Ratings: 36.5VDC, 10.0Ah ;
2	**Maße / Gewicht** *Dimensions / Weight*	Weight Approx. 2.00 kg L*W*H (max. Approx.)= 315*93*43 mm
3	**Bedienelemente** *Operating elements*	/
4	**Ausstattung / Zubehör** *Equipment / Accessories*	/
5	**Verwendete Materialien** *Used materials*	Shell: Aluminum + ABS Cell: Ternary lithium
6	**Sonstiges** *Other*	Model of battery: *CHY3610,* Manufacturer: *Dongguan CHY Battery Technology Co., Ltd.* Model of charger: *FY0634201500,* Manufacturer: *Shenzhen Fuyuandian Power Co., Ltd.* Rating: *Input 100-240VAC, 1.8A, 50/60Hz; Output 42VDC 1.5A.* Model of cell: *18650.*

Vehicle Type : E9
Manufacturer : ZAMELUXGREEN.S.L

Test photos:

List of modifications Appendix 0

Correction of : - ---

Modification of : - ---

Addition of : - ---

Deletion of : - ---

Test minutes of Battery **Appendix 1**

0. Test condition

0.1.	Test place	:	Suzhou, P.R.China
1.	Test facilities	:	The test equipment used was in compliance with the requirements of the regulation.
2.	Test Vehicle(s)		
2.1	Type	:	E9
	Variant	:	---
	Version	:	2
2.2	Identification Number	:	---
2.3	Make of Battery	:	Dongguan CHY Battery Technology Co., Ltd.
2.3.1	Type of Battery	:	CHY3610
2.4	Make of Power controller	:	SHENZHEN ZYDTECH INTELLIGENT TECHNOLOGY CO., LTD.
2.4.1	Type of Power controller	:	HW9027-ZYD009-E9T
2.5.	Make of Charger	:	Shenzhen Fuyuandian Power Co., Ltd.
2.5.1	Type of Charger	:	FY0634201500

3. Test requirements

a) The EPAC and batteries pack shall be designed in order to avoid risk of fire and mechanical deterioration resulting from abnormal use. Compliance is checked by the test described in 4	:	Confirmed
b) During the test the EPAC and the batteries shall not emit flames, molten metal or poisonous ignitable gas in hazardous amounts and any enclosure shall show no damage that could impair compliance with this European Standard. Safety and compatibility of the battery/charger combination shall be ensured, according to the manufacturer's specifications.	:	Confirmed

c) The battery terminals shall be protected against creating an accidental short circuit. : Confirmed

d) An appropriate care shall be taken to ensure that the batteries are protected against overcharging. An appropriate overheating and short circuit protection device shall be fitted. : Confirmed

5. Test method

a) Battery terminals are short-circuited with the batteries in a fully charged condition. : Pass

b) Motor terminals are short-circuited; all commands are in “ON” position, while the batteries are fully charged. : Pass

c) The EPAC is operated with the electric motor or drive system blocked until the motor torque stops or the battery is fully discharged. : Pass

d) The battery is charged for double the recommended charging period or for 24 h whichever is greater : Pass

Vehicle Type : E9
Manufacturer : ZAMELUXGREEN.S.L

TEST REPORT

according to UN-Regulation

UNIFORM PROVISIONS CONCERNING THE APPROVAL OF INTERNAL COMBUSTION ENGINES OR ELECTRIC DRIVE TRAINS INTENDED FOR THE PROPULSION OF MOTOR VEHICLES OF CATEGORIES M AND N WITH REGARD TO THE MEASUREMENT OF THE NET POWER AND THE MAXIMUM 30 MINUTES POWER OF ELECTRIC DRIVE TRAINS

UN R85

including all amendments until

Series of Amendments: 00

Supplement: 07

Structure of the Test Report

Item No.
0. General information
1. Tested vehicle(s) / object(s)
2. Test record
3. List of appendices
4. Statement of conformity

The Test Report shall be reproduced and published in full by the client only. It shall however be reproduced partially with the written permission of the Testing Laboratory only.

0. General information

0.1.	Make (trade name of the manufacturer)	: ZAMELUXGREEN.S.L
0.2.	Type	: E9
0.3.	Category of vehicle	: Elektrokleinstfahrzeug
0.4.	Name and address of the manufacturer	: ZAMELUXGREEN.S.L c/ Sant Adrià, 89-91 Nave C, 08030 Barcelona Spain
0.5.	No. of the information document	: ---
	-Date of issue	: ---
	-Date of last change	: ---

1. Tested vehicle(s)

1.1. Description

1.1.1.	~~Vehicle~~/Object(s)	: Motor
	Commercial description	: ---
	Type / variant(s) / version(s)	: JY36V/---/ 1/2
	Identification number	: 1* JY36V00119120704 2* JY36V00119121103
1.1.2.	Condition of vehicle(s)	: ---
1.2.	Worst case selection	: All versions had been tested.
1.3.	Remark	: n.a.

2. Test record

2.1.	Equipment for measuring and testing	: The test facilities / measurement equipment used were in compliance with the test requirements.
2.1.1.	Specifications for the test site	: Not applicable
2.1.2.	Subcontracting	: Not applicable
2.2.	Test results	: See Appendix 1
2.2.1.	Test results referring to measurements	: All measurement results are listed and referred to the respective limit(s) with judgment.
2.2.2.	Attributive tests	: Not applicable
2.2.3.	Alternative test provisions	: Not applicable
2.3.	Additional information	: The results of the test refer exclusively to the object(s) mentioned under point 1. Of this report.
	Test site	: Wuxi Test center of Supervision and Inspection for Product Quality Wuxi, P.R.China
	Test date	: January 03, 2020
2.4.	Remarks	: ---

3. List of Appendices

0	List of modifications	: Page 5
1	Test minutes	: Pages 6 - 9

4. Statement of conformity

The in point 0.5. mentioned information document and the type described in that comply with the requirements mentioned on page 1.

With regard to the required level of performance to be achieved, the tested items were representative for the type to be approved (see point 1.2).

The mentioned test results refer to the vehicle(s)/object(s) described under point 1.1 of this report.

Engineering Center, Shanghai, August 27, 2020
LJZ/LS

Liangjun Zhang
Expert Technical Service

List of modifications

Appendix 0

Correction of : - --

Modification of : - --

Addition of : - --

Deletion of : - --

Test minutes of Motor measuring

Appendix 1

1. Test condition

0.3. Test date : January 03, 2020

0.4. Test site : Wuxi, P.R.China

1. Test facilities : The test equipment used was in compliance with the requirements of the regulation.

2. Test vehicle(s)

2.1. Type : JY36V

variant : ---

version : 1/2

3. Motor

3.1. Motor make : Zhejiang Weite Motor Manufacture Co.,

3.2 Motor type : JY36V

3.3. Motor number : 1* JY36V00119120704
2* JY36V00119121103

3.4. Test voltage : 36V

4. Power controller

4.1. Power controller make : SHENZHEN ZYDTECH INTELLIGENT TECHNOLOGY CO., LTD.

4.2. Power controller type : 1* HW9027-ZYD009-E9
2* HW9027-ZYD009-E9T

5. Characteristics of the dynamometer

5.1. Make : KONZON

5.2. Type : ZC300KB

6. Detailed results of measurement

6.1. Net torque and power :

Version 1:

Measured				Corrected	
Motor Speed	Torque	Power	Power to be added for auxiliary equipment	Net Torque	Net Power
r/min	Nm	W	W	Nm	W
453.3	0.05	2.4	0	0.05	2.4
453.2	1.21	57.6	0	1.21	57.6
453.2	1.97	93.5	0	1.97	93.5
453.1	3.06	145.3	0	3.06	145.3
453.1	4.30	204.1	0	4.30	204.1
453.1	5.52	261.7	0	5.52	261.7
453.2	6.39	303.3	0	6.39	303.3
453.1	6.86	325.6	0	6.86	325.6
452.9	7.55	358.1	0	7.55	358.1
358.4	8.75	328.5	0	8.75	328.5
289.6	9.69	293.7	0	9.69	293.7
183.6	11.24	216.1	0	11.24	216.1

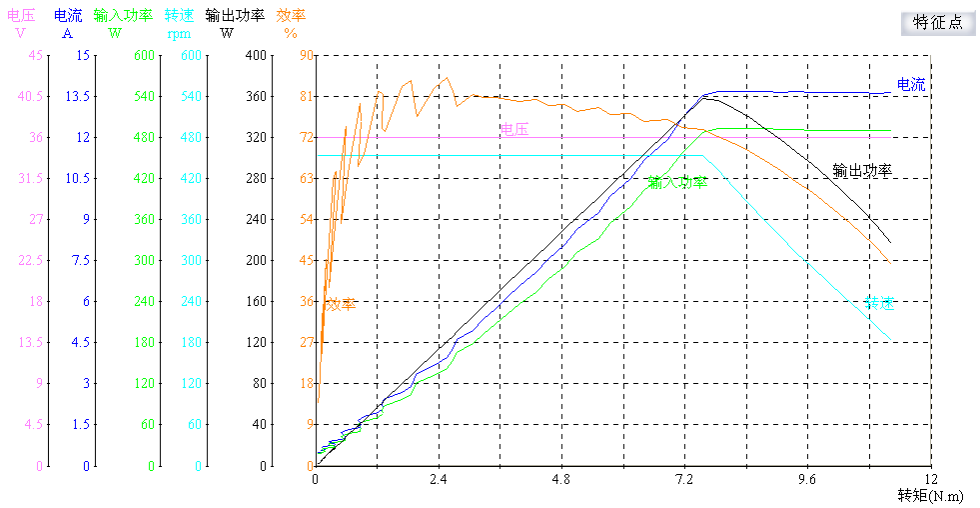

Version 2:

Measured				Corrected	
Motor Speed	Torque	Power	Power to be added for auxiliary equipment	Net Torque	Net Power
r/min	Nm	W	W	Nm	W
464.7	0.01	0.5	0	0.01	0.5
463.3	1.06	51.5	0	1.06	51.5
462.7	2.09	101.4	0	2.09	101.4
461.3	3.13	151.1	0	3.13	151.1
460.2	4.19	201.8	0	4.19	201.8
459.4	5.11	245.7	0	5.11	245.7
457.6	6.43	308.2	0	6.43	308.2
456.1	7.56	360.9	0	7.56	360.9
455.3	7.98	380.2	0	7.98	380.2
454.4	8.38	398.9	0	8.38	398.9
383.2	9.34	374.6	0	9.34	374.6
309.5	10.29	333.6	0	10.29	333.6

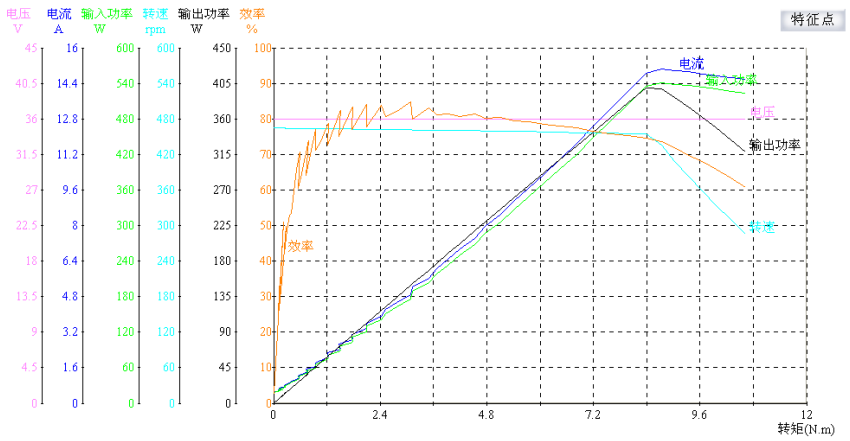

4.2. Maximum 30 minutes power :

Version 1:

Time [min]	P [W]	rpm	Difference [%]
0	326.4	453.0	0.00
5	326.0	452.4	-0.12
10	327.0	452.2	0.18
15	327.4	451.7	0.31
20	327.6	451.8	0.37
25	328.1	451.6	0.52
30	328.0	451.6	0.49
Average	327.2	452.0	

Version 2:

Time [min]	P [W]	rpm	Difference [%]
0	360.6	463.6	0.00
5	363.5	462.4	0.80
10	361.0	458.9	0.11
15	352.1	448.3	-2.36
20	346.1	442.8	-4.02
25	346.7	442.6	-3.85
30	345.7	441.8	-4.13
Average	353.7	451.5	

4.2.1. Motor speed : 1* 450 rpm
(Declared by the manufacturer) 2* 450 rpm

4.2.2. Maximum 30 minutes power : 1* 330 W
(Declared by the manufacturer) 2* 350 W

4.2.3. Maximum 30 minutes power : 1* 327.2 W (99.15% of the declared power)
(Test result) 2* 353.7 W (101.06% of the declared power)

Test photos:

Version 1:

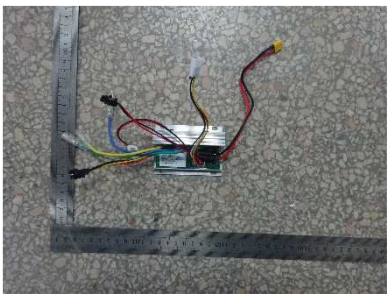	

Version 2：

TÜV Rheinland Group

Test Report No.: 87-R10-647/20-00

Vehicle Type : E9
Manufacturer : ZAMELUXGREEN.S.L

TEST REPORT

according to UN-Regulation

UNIFORM PROVISIONS CONCERNING THE APPROVAL OF VEHICLES WITH REGARD TO ELECTROMAGNETIC COMPATIBILITY

UN R10

including all amendments until

Series of Amendments: 05

Supplement: 01

applicable for vehicles according to

Elektrokleinstfahrzeuge-Verordnung (eKFV)

(§ 7 No. 2)

Structure of the Test Report	Item No.
	0. General information
	1. Tested vehicle(s) ~~/ object(s)~~
	2. Test record
	3. List of appendices
	4. Statement of conformity

The Test Report shall be reproduced and published in full by the client only. It shall however be reproduced partially with the written permission of the Testing Laboratory only.

0. General information

0.1.	Make (trade name of the manufacturer)	: ZAMELUXGREEN.S.L
0.2.	Type	: E9
0.3.	Category of vehicle	: Elektrokleinstfahrzeug
0.4.	Name and address of the manufacturer	: ZAMELUXGREEN.S.L c/ Sant Adrià, 89-91 Nave C, 08030 Barcelona Spain
0.5.	No. of the information document	: ---
	-Date of issue	: ---
	-Date of last change	: ---

1. Tested vehicle(s)

1.1. Description

1.1.1.	Vehicle	: Elektrokleinstfahrzeug
	Commercial description	: ---
	Type / variant(s) / version(s)	: E9/ --- / 1/2
	Identification number	: 1* JY1912010051AB 2* JY1912010051AB
1.1.2.	Condition of vehicle(s)	: new
1.2.	Worst case selection	: All versions had been tested.
1.3.	Remark	: n.a.

2. Test record

2.1.	Equipment for measuring and testing	: The test facilities / measurement equipment used were in compliance with the test requirements.
2.1.1.	Specifications for the test site	: Not applicable
2.1.2.	Subcontracting	: Not applicable
2.2.	Test results	: See Appendix 1
2.2.1.	Test results referring to measurements	: All measurement results are listed and referred to the respective limit(s) with judgment.
2.2.2.	Attributive tests	: Not applicable
2.2.3.	Alternative test provisions	: Not applicable
2.3.	Additional information	: The results of the test refer exclusively to the object(s) mentioned under point 1. of this report.
	Test site	: Shanghai Inspection and Testing Institute of Instruments and Automatic Systems Co., Ltd. Shanghai, P.R. China
	Test date	: January 06, 2020
2.4.	Remarks	: ---

3. List of Appendices

0	List of modifications	:	Page 5
1	Test minutes	:	Pages 6 - 12

4. Statement of conformity

The in point 0.5. mentioned information document and the type described in that comply with the requirements mentioned on page 1.

With regard to the required level of performance to be achieved, the tested items were representative for the type to be approved (see point 1.2).

The mentioned test results refer to the vehicle(s)/object(s) described under point 1.1 of this report.

Engineering Center, Shanghai, August 27, 2020
LJZ/LS

Liangjun Zhang
Expert Technical Service

TÜV Rheinland Group

Test Report No.: 87-R10-647/20-00

Vehicle Type : E9
Manufacturer : ZAMELUXGREEN.S.L

List of modifications **Appendix 0**

Correction of : - ---

Modification of : - ---

Addition of : - ---

Deletion of : - ---

Vehicle Type : E9
Manufacturer : ZAMELUXGREEN.S.L

Test minutes of EMC measuring **Appendix 1**

0.	Test condition	
0.1.	Test date	: January 06, 2020
0.2.	Test site	: Shanghai, P.R.China
1.	Test facilities	: The test equipment used was in compliance with the requirements of the regulation.
2.	Test vehicle(s)	
2.1.	Type	: E9
	variant	: ---
	version	: 1/2
2.2.	Identification number	: JY1912010051AB
2.3.	Motor	
2.3.1	Motor maker	: Zhejiang Weite Motor Manufacture Co.,
2.3.2.	Motor type	: JY36V
2.3.3.	Motor number	: 1* JY36V00119120703 2* JY36V00119121101
2.4.	Controller	
2.4.1.	Controller maker	: SHENZHEN ZYDTECH INTELLIGENT TECHNOLOGY CO., LTD.
2.4.2.	Controller type	: 1* HW9027-ZYD009-E9 2* HW9027-ZYD009-E9T
2.5.	Battery	
2.5.1.	Battery maker	: Dongguan CHY Battery Technology Co.,
2.5.2.	Battery type	: 1* CHY3675 36VDC, 7.50Ah 2* CHY3610 36.5VDC, 10.0Ah

2.6. Headlamp

2.6.1.	Headlamp maker	: Sate-Lite (Foshan) Plastics Co., Ltd.
2.6.2.	Headlamp type	: G1
2.6.3.	Approval number	: K 1220

2.7. Rear position lamp

2.7.1.	Rear position lamp maker	: Sate-Lite (Foshan) Plastics Co., Ltd.
2.7.2.	Rear position lamp type	: M4
2.7.3.	Approval number	: K 1634

TÜV Rheinland Group

Test Report No.: 87-R10-647/20-00

Vehicle Type : E9
Manufacturer : ZAMELUXGREEN.S.L

3. Test results of broadband electromagnetic emissions from vehicle(Annex 4)

(Other than REESS in charging mode coupled to the power grid)

3.1.	Test condition	: Closed installation
3.2.	Distance of the antenna (m)	: 3
3.3.	Height of the antenna (m)	: 1.8
3.4.	Engine / Motor revolution for radiated broadband emissions	: 20 km/h (Maximum speed)

Version 1:

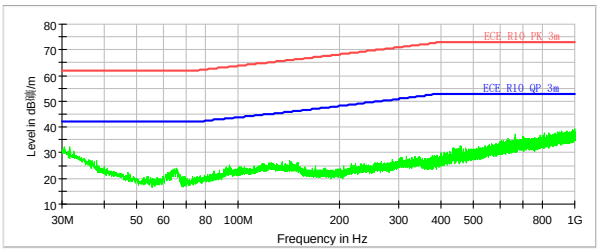	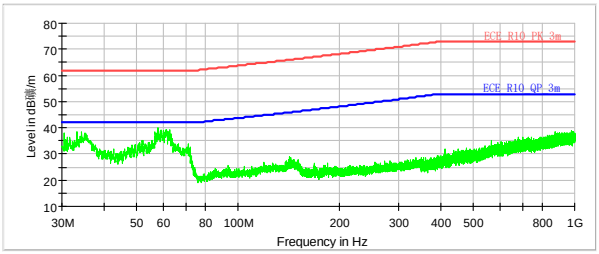
Left hand side antenna horizontal	Left hand side antenna vertical
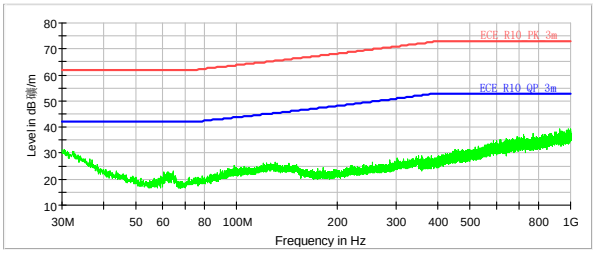	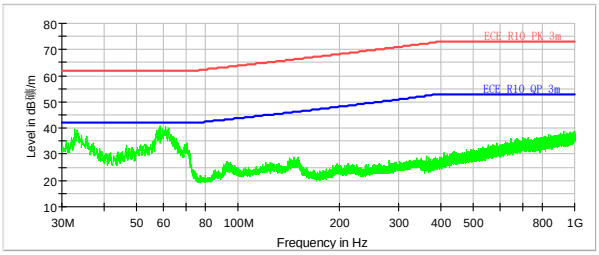
Right hand side antenna horizontal	Right hand side antenna vertical

TÜV Rheinland Group

Test Report No.: 87-R10-647/20-00

Vehicle Type : E9
Manufacturer : ZAMELUXGREEN.S.L

Version 2:

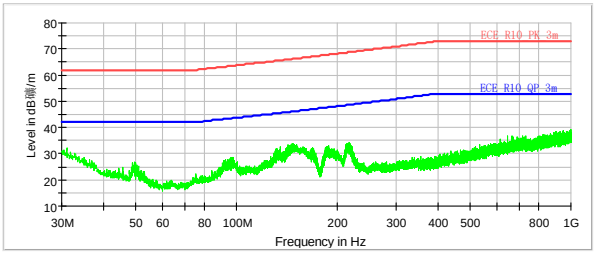	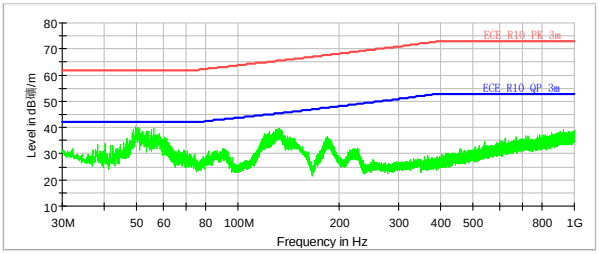
Left hand side antenna horizontal	Left hand side antenna vertical
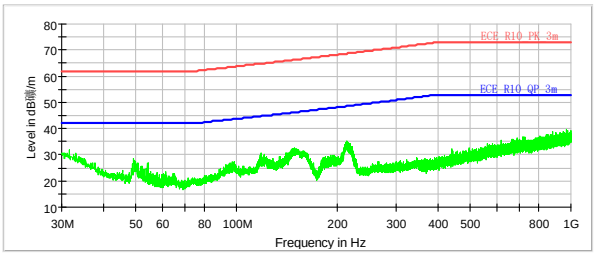	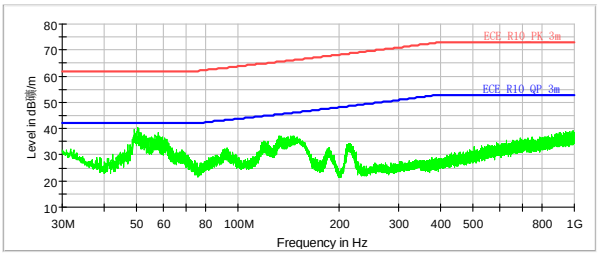
Right hand side antenna horizontal	Right hand side antenna vertical

The measurement has been taken over the range of frequencies from 30 to 1000 MHz

TÜV Rheinland Group

Test Report No.: 87-R10-647/20-00

Vehicle Type : E9
Manufacturer : ZAMELUXGREEN.S.L

4. Test results of broadband electromagnetic emissions from vehicle (Annex 4)

(REESS in charging mode coupled to the power grid)

4.1. Test condition : Closed installation

4.2. Distance of the antenna (m) : 3

4.3. Height of the antenna (m) : 1.8

Version 1:

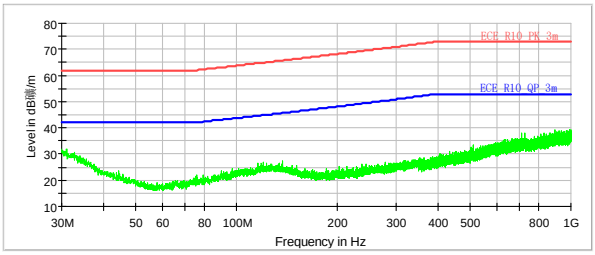	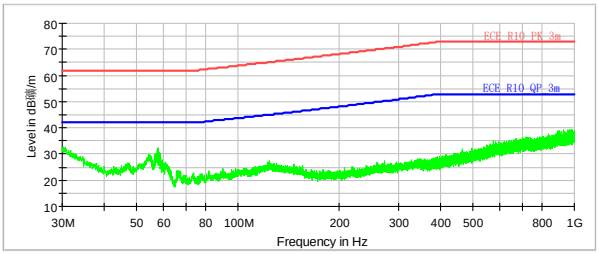
Left hand side antenna horizontal	Left hand side antenna vertical
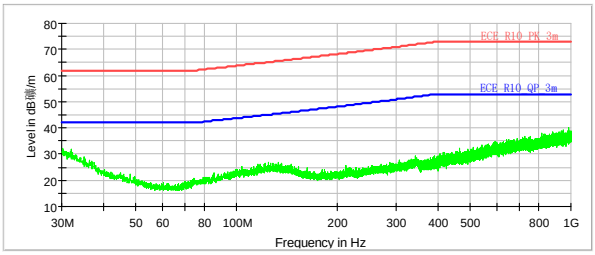	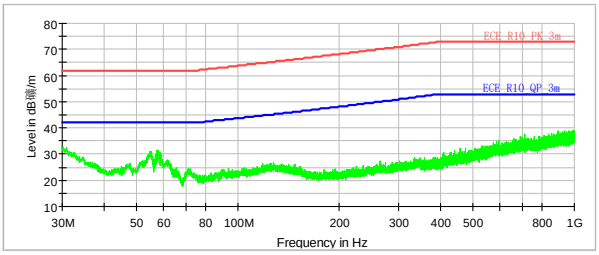
Right hand side antenna horizontal	Right hand side antenna vertical

TÜV Rheinland Group

Test Report No.: 87-R10-647/20-00

Vehicle Type : E9
Manufacturer : ZAMELUXGREEN.S.L

Version 2:

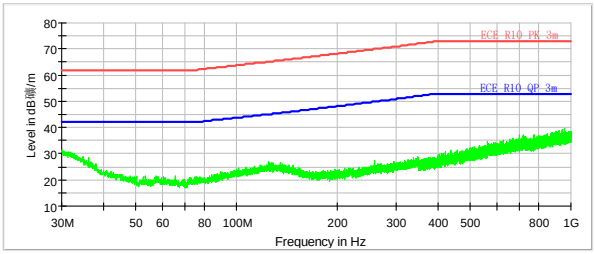	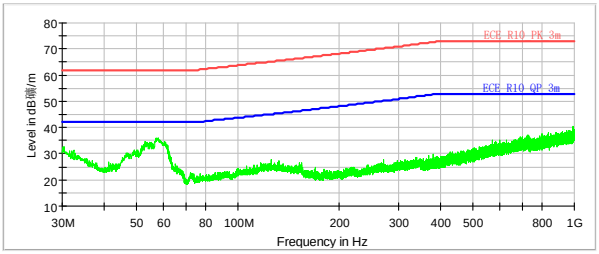
Left hand side antenna horizontal	Left hand side antenna vertical
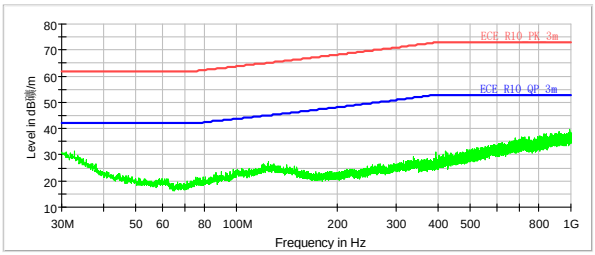	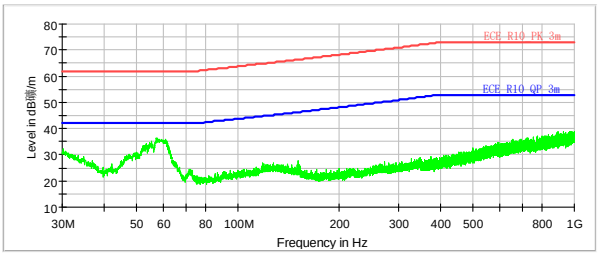
Right hand side antenna horizontal	Right hand side antenna vertical

The measurement has been taken over the range of frequencies from 30 to 1000 MHz

TÜV Rheinland Group

Test Report No.: 87-R10-647/20-00

Vehicle Type : E9
Manufacturer : ZAMELUXGREEN.S.L

5. Test results of narrowband electromagnetic emissions from vehicle (Annex 5)

(Other than REESS in charging mode coupled to the power grid)

5.1. Test condition : Closed installation

5.2. Distance of the antenna (m) : 3

5.3. Height of the antenna (m) : 1.8

Version 1:

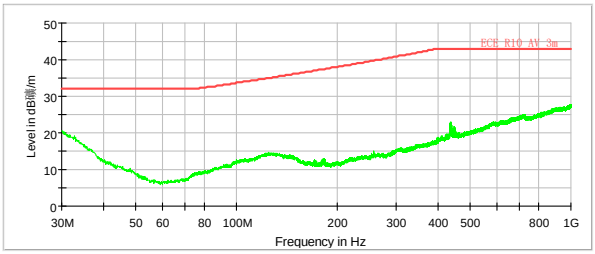	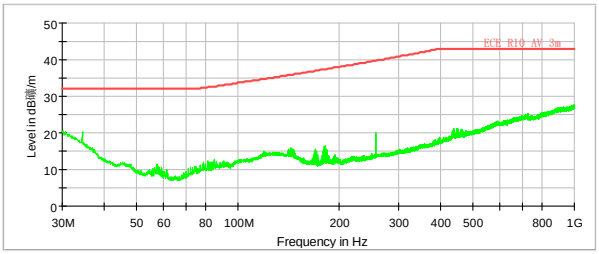
Left hand side antenna horizontal	Left hand side antenna vertical
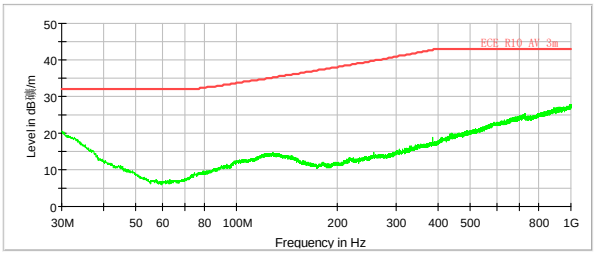	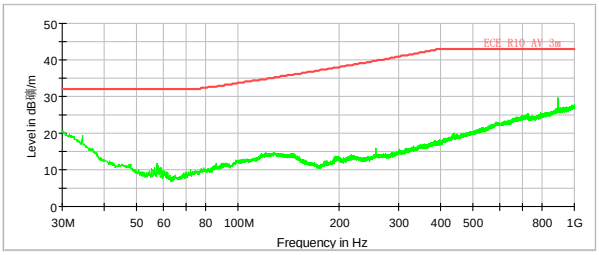
Right hand side antenna horizontal	Right hand side antenna vertical

TÜV Rheinland Group

Test Report No.: 87-R10-647/20-00

Vehicle Type : E9
Manufacturer : ZAMELUXGREEN.S.L

Version 2:

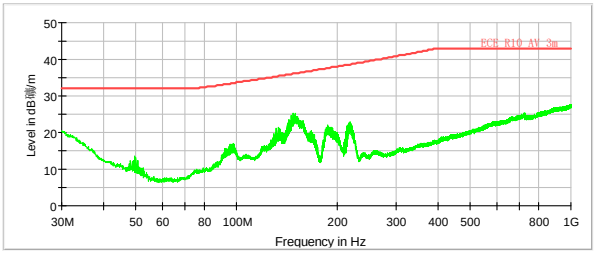	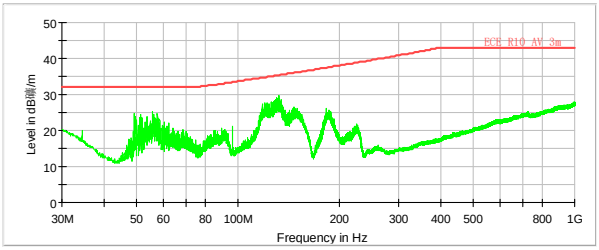
Left hand side antenna horizontal	Left hand side antenna vertical
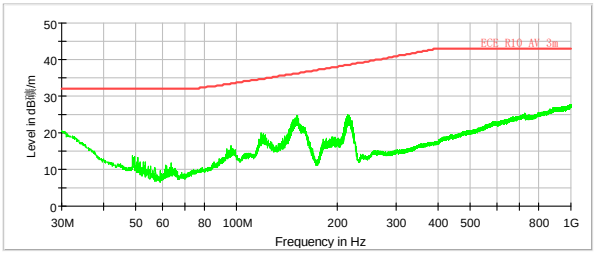	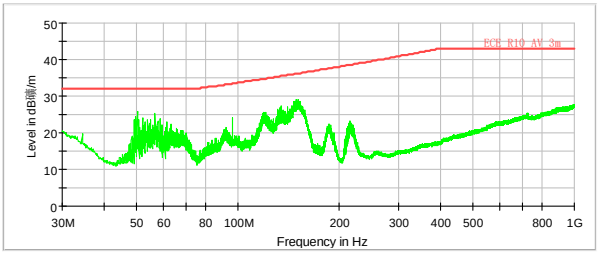
Right hand side antenna horizontal	Right hand side antenna vertical

The measurement has been taken over the range of frequencies from 30 to 1000 MHz

6. Test results of immunity to electromagnetic radiation (Annex 6)

(Other than REESS in charging mode coupled to the power grid)

6.1.	Test method	: Free field
6.2.	Specified frequency range	: 20 ~ 2000 MHz in vertical polarization
6.3.	~~Alternatively spot frequencies~~	: ~~27, 45, 65, 90, 120, 150, 190, 230, 280, 380, 450, 600, 750, 900, 1300 and 1800 MHz~~
6.4.	Field strength	: 30 V/m rms (over 90% of 20~2000 MHz)
6.5.	Vehicle speed	: 20 km/h (Maximum speed)

During the tests performed in accordance with Annex 6, there was no any degradation of performance of "immunity related functions" listed below.

"50 km/h cycle" vehicle test conditions	*Failure criteria*
Vehicle speed 50 km/h (respectively 25 km/h for L_1, L_2 vehicles) ±20 per cent (vehicle driving the rollers). If the vehicle is equipped with a cruise control system, it shall be operational.	Speed variation greater than ±10 per cent of the nominal speed. In case of automatic gearbox: change of gear ratio inducing a speed variation greater than ±10 per cent of the nominal speed.
Dipped beams ON (manual mode)	Lighting OFF
~~Direction indicator on driver's side ON~~	~~Frequency change (lower than 0.75 Hz or greater than 2.25 Hz). Duty cycle change (lower than 25 per cent or greater than 75 per cent).~~
~~Horn OFF~~	~~Unexpected activation of horn~~

7. Test results of immunity to electromagnetic radiation (Annex 6)

(REESS in charging mode coupled to the power grid)

All other equipment which can be switched on permanently by the driver or passenger should be OFF.	: Pass
Only non-perturbing equipment shall be used while monitoring the vehicle. The vehicle exterior and the passenger compartment shall be monitored to determine whether the requirements of this annex are met (e.g. by using (a) video camera(s), a microphone, etc.)	: Pass

There was no any degradation of performance of "immunity related functions" listed below

"REESS in charging mode" vehicle test conditions	Failure criteria
The REESS shall be in charging mode (engine OFF). The REESS state of charge shall be agreed in between the manufacturer and the Technical Service.	Vehicle sets in motion

8. Test result : Fulfil the requirements

TÜV Rheinland Group

Test Report No.: 87-R10-647/20-00

Vehicle Type : E9
Manufacturer : ZAMELUXGREEN.S.L

Test photos:

Version 1:

	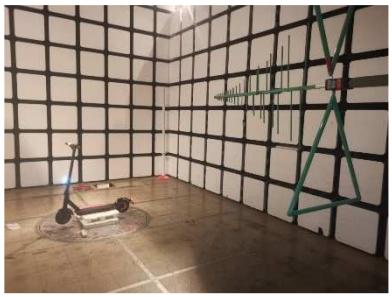

Version 2:

Erklärung des Genehmigungsinhabers über Maßnahmen zur Verhinderung unbefugter Eingriffe in den Antriebsstrang und andere genehmigungsrelevante Bauteile oder Systeme
Approval holder's declaration on measures to prevent tampering on powertrain and other approval relevant components or systems

Der Unterzeichner ***The undersigned***	:	Shujing Zhang
(vollständiger Name und Position) *(full name and position)*		
Firmenname und Anschrift des Genehmigungsinhabers *Company and address of the approval holder*	:	ZAMELUXGREEN.S.L ES-08030 Barcelona
Name und Anschrift des Bevollmächtigten des Genehmigungsinhabers (sofern vorhanden) *Name and address of the approval holder's representative (if any)*	:	--

erklärt hiermit, dass er
hereby certifies that

für das nachfolgend bezeichnete Fahrzeug:
for the below mentioned vehicle:

0.1.	**Fabrikmarke** ***make***	: ZAMELUX
0.2.	**Typ** (17) ***Type*** (17)	: E9
0.2.1.	Variante(n) (17) *Variant(s)* (17)	: --
0.2.2.	Version(en) (17) *Version(s)* (17)	: --
0.2.3.	Handelsname(n) (sofern vorhanden) *Commercial name(s) (if available)*	: ZAMELUX, ZWHEEL
0.3.	**Klasse des Fahrzeugs** ***Class of the vehicle***	: Elektrokleinstfahrzeug

keine austauschbaren Bauteile in Verkehr bringen wird, die eine Erhöhung der Antriebsleistung oder Höchstgeschwindigkeit, die für die jeweilige Klasse gilt, ermöglichen könnten,
he will not market interchangeable components, which could enable propulsion unit performance or maximum design speed to exceed levels applicable to the relevant category

keine Schnittstellen (z.B. USB oder Bluetooth) implementieren wird, über welche genehmigungsrelevante Bauteilfunktionen oder Systeme (z.B. Bremse oder

Motorbedieneinrichtung) unzulässig durch den Anwender beeinflusst werden können
he will not implement any interfaces (e.g. USB or Bluetooth) which allow the consumer to influence approval relevant component functions or systems (e.g. brake or engine control unit) in an impermissible way

und
and

dass die vom Hersteller erleichterten Änderungen der folgenden Merkmale:
that the manufacturer-facilitated modifications of the following characteristics:

~~(a) gegebenenfalls der Funkenerzeugung durch die Zündanlage;~~
~~*(a) spark delivery of the ignition system if applicable;*~~

~~(b) der Kraftstoffversorgungsanlage und -förderanlage;~~
~~*(b) fuel feed and delivery system;*~~

~~(c) des Luftansaugsystems einschließlich Luftfilter (Änderung oder Entfernung);~~
~~*(c) air-intake system including air filter(s) (modification or removal);*~~

(d) gegebenenfalls der Ausführung der Antriebsbatterie oder der Stromversorgung des/der Elektromotors/en;
(d) propulsion battery configuration or electric power to the electric motor(s) if applicable;

(e) des Kraftübertragungsstrangs;
(e) drive-train;

(f) der Steuereinheit(en) für die Antriebsleistung des Antriebsstrangs
(f) the control unit(s) that controls the propulsion unit performance of the powertrain.

mit den Anforderungen aus Kapitel 4.2.17 der DIN EN 15194:2018-11 übereinstimmen.
comply with the requirements set out in Chapter 4.2.17 of DIN EN 15194:2018-11.

Ort:
Place:

Barcelona

Datum:
Date:

01/12/2020

Unterschrift:
Signature:

Name und Stellung im Unternehmen:
Name and position in the company:

Shujing Zhang/ administrator

Datenbestätigung
für das nachfolgend beschriebene Fahrzeug zum Zwecke der Vorlage

bei der Zulassungsbehörde für die Zulassung des Fahrzeugs, soweit ein Gutachten/Zusatzgutachten für die Zulassung nicht erforderlich ist

Feld	Teil II	Bezeichnung		Daten
D.1	X	Marke		ZAMELUX
D.2	X	Typ		E9
		Variante		-
		Version		1
D.3	X	Handelsbezeichnung(en)		-
E	X	Fahrzeug-Identifizierungsnummer		JE91S851 L00001
F.1		Technisch zulässige Gesamtmasse in kg		120 kg
F.2		Im Zulassungsmitgliedstaat zulässige Gesamtmasse in kg		120 kg
G		Masse des in Betrieb befindlichen Fahrzeugs in kg (Leermasse)		13,0 kg
J	X	Fahrzeugklasse		27
K	X	Nummer der EG-Typgenehmigung oder ABE		
L		Anzahl der Achsen		2
O		Technisch zulässige Anhängelast in kg	O.1 gebremst in kg	-
			O.2 ungebremst in kg	-
P.1	X	Hubraum in cm^3		-
P.2 P.4	X	Nennleistung in kW Nenndrehzahl bei min^{-1}		0,33 kW/ -
P.3	X	Kraftstoffart oder Energiequelle		Elektro
Q		Leistungsgewicht in kW/kg (nur bei Krädern)		0,02
R	X	Farbe des Fahrzeugs		-
S.1		Sitzplätze einschließlich Fahrersitz		-
S.2		Stehplätze		1
T		Höchstgeschwindigkeit in km/h		20
U.1		Standgeräusch in dB (A)		-
U.2		Drehzahl in min^{-1} zu U.1		-
U.3		Fahrgeräusch in dB (A)		-
V.7		CO_2 (in g/km)		-
V.9		Für die EG-Typgenehmigung maßgebliche Schadstoffklasse		-
(2)	X	Hersteller-Kurzbezeichnung		
(2.1)	X	Code zu (2)		
(2.2)	X	Code zu (D.2) mit Prüfziffer	Typ/Variante/Variation	
			Prüfziffer	
(3)	X	Prüfziffer zur Fahrzeug-Identifizierungsnummer		
(4)	X	Art des Aufbaus		0003
(5)	X	Bezeichnung der Fahrzeugklasse und des Aufbaus		Elektrokleinstfz. m. Lenk- o. Haltestange
(6)	X	Datum zu K		
(7.1)		Technisch zulässige maximale Achslast/Masse je Achsgruppe in kg:	Achse 1	68
(7.2)			Achse 2	70
(7.3)			Achse 3	-
(8.1)		Zulässige maximale Achslast im Zulassungsmitgliedstaat in kg	Achse 1	68
(8.2)			Achse 2	70
(8.3)			Achse 3	-
(9)		Anzahl der Antriebsachsen		1
(10)	X	Code zu P.3		0004
(11)	X	Code zu R		-
(12)		Rauminhalt des Tanks bei Tankfahrzeugen in m^3		-
(13)		Stützlast in kg		-
(14)		Bezeichnung der nationalen Emissionsklasse		-
(14.1)		Code zu V.9 oder (14)		-
(15.1)		Bereifung – Achse 1		219 *50 mm
(15.2)		Bereifung – Achse 2		219 *50 mm
(15.3)		Bereifung – Achse 3		-
(18)		Länge in mm		1168
(19)		Breite in mm		435
(20)		Höhe in mm		1100
(22)		Bemerkungen und Ausnahmen * Der Fahrzeugführer hat sich vor Fahrtantritt mithilfe der Betriebsanleitung mit dem Fahrzeug vertraut zu machen. Dies gilt insbesondere für erschwerte Fahrsituationen (beispielsweise Bordsteine, steile Rampen, Quer- und Längsrillen etc.).		
(22a)		-		
(23)	X	Raum für interne Vermerke des Herstellers	-	

Bescheinigung der Angaben durch den Ausstellungsberechtigten:

- Die Richtigkeit der vorstehenden Angaben wird heute bescheinigt.
- Die Übereinstimmung mit der unter Feld K und (6) angegebenen ABE und dem gleichnamigen Typ ggf. nebst Variante/Version bzw. Ausführung wird bestätigt.
- ~~Für die Zulassung ist ein Gutachten/Teilgutachten erforderlich.~~

Datum 01.12.2020

Firma ZAMELUXGREEN.S.L

Unterschrift

Shujing Zhang

ZAMELUX GREEN, S.L.
Carrer Sant Adrià 89-91, nave c
08030, Barcelona
NIF: B67255497 Tel: 936675437

Datenbestätigung
für das nachfolgend beschriebene Fahrzeug zum Zwecke der Vorlage

bei der Zulassungsbehörde für die Zulassung des Fahrzeugs, soweit ein Gutachten/Zusatzgutachten für die Zulassung nicht erforderlich ist

Feld	Teil II	Bezeichnung		Daten
D.1	X	Marke		ZAMELUX
D.2	X	Typ		E9
		Variante		-
		Version		2
D.3	X	Handelsbezeichnung(en)		-
E	X	Fahrzeug-Identifizierungsnummer		JE91R102L00001
F.1		Technisch zulässige Gesamtmasse in kg		120 kg
F.2		Im Zulassungsmitgliedstaat zulässige Gesamtmasse in kg		120 kg
G		Masse des in Betrieb befindlichen Fahrzeugs in kg (Leermasse)		15,3 kg
J	X	Fahrzeugklasse		27
K	X	Nummer der EG-Typgenehmigung oder ABE		
L		Anzahl der Achsen		2
O		Technisch zulässige Anhängelast in kg	O.1 gebremst in kg	-
			O.2 ungebremst in kg	-
P.1	X	Hubraum in cm^3		-
P.2 P.4	X	Nennleistung in kW Nenndrehzahl bei min^{-1}		0,35 kW/ -
P.3	X	Kraftstoffart oder Energiequelle		Elektro
Q		Leistungsgewicht in kW/kg (nur bei Krädern)		0,02
R	X	Farbe des Fahrzeugs		-
S.1		Sitzplätze einschließlich Fahrersitz		-
S.2		Stehplätze		1
T		Höchstgeschwindigkeit in km/h		20
U.1		Standgeräusch in dB (A)		-
U.2		Drehzahl in min^{-1} zu U.1		-
U.3		Fahrgeräusch in dB (A)		-
V.7		CO_2 (in g/km)		-
V.9		Für die EG-Typgenehmigung maßgebliche Schadstoffklasse		-
(2)	X	Hersteller-Kurzbezeichnung		
(2.1)	X	Code zu (2)		
(2.2)	X	Code zu (D.2) mit Prüfziffer	Typ/Variante/Variation	
			Prüfziffer	
(3)	X	Prüfziffer zur Fahrzeug-Identifizierungsnummer		
(4)	X	Art des Aufbaus		0003
(5)	X	Bezeichnung der Fahrzeugklasse und des Aufbaus		Elektrokleinstfz. m. Lenk- o. Haltestange
(6)	X	Datum zu K		
(7.1)		Technisch zulässige maximale Achslast/Masse je Achsgruppe in kg:	Achse 1	68
(7.2)			Achse 2	70
(7.3)			Achse 3	-
(8.1)		Zulässige maximale Achslast im Zulassungsmitgliedstaat in kg	Achse 1	68
(8.2)			Achse 2	70
(8.3)			Achse 3	-
(9)		Anzahl der Antriebsachsen		1
(10)	X	Code zu P.3		0004
(11)	X	Code zu R		-
(12)		Rauminhalt des Tanks bei Tankfahrzeugen in m^3		-
(13)		Stützlast in kg		-
(14)		Bezeichnung der nationalen Emissionsklasse		-
(14.1)		Code zu V.9 oder (14)		-
(15.1)		Bereifung – Achse 1		254 *50 mm
(15.2)		Bereifung – Achse 2		254 *50 mm
(15.3)		Bereifung – Achse 3		-
(18)		Länge in mm		1200
(19)		Breite in mm		570
(20)		Höhe in mm		1158
(22)		Bemerkungen und Ausnahmen * Der Fahrzeugführer hat sich vor Fahrtantritt mithilfe der Betriebsanleitung mit dem Fahrzeug vertraut zu machen. Dies gilt insbesondere für erschwerte Fahrsituationen (beispielsweise Bordsteine, steile Rampen, Quer- und Längsrillen etc.).		
(22a)		-		
(23)	X	Raum für interne Vermerke des Herstellers	-	

Bescheinigung der Angaben durch den Ausstellungsberechtigten:

- Die Richtigkeit der vorstehenden Angaben wird heute bescheinigt.
- Die Übereinstimmung mit der unter Feld K und (6) angegebenen ABE und dem gleichnamigen Typ ggf. nebst Variante/Version bzw. Ausführung wird bestätigt.
- ~~Für die Zulassung ist ein Gutachten/Teilgutachten erforderlich.~~

Datum 01.12.2020

Firma ZAMELUXGREEN.S.L

Unterschrift

Shujing Zhang

ZAMELUX GREEN, S.L.
Carrer Sant Adrià 89-91, nave c
08030, Barcelona
NIF: B67255497 Tel: 936675437