User Guide for the arpara Tethered 5K

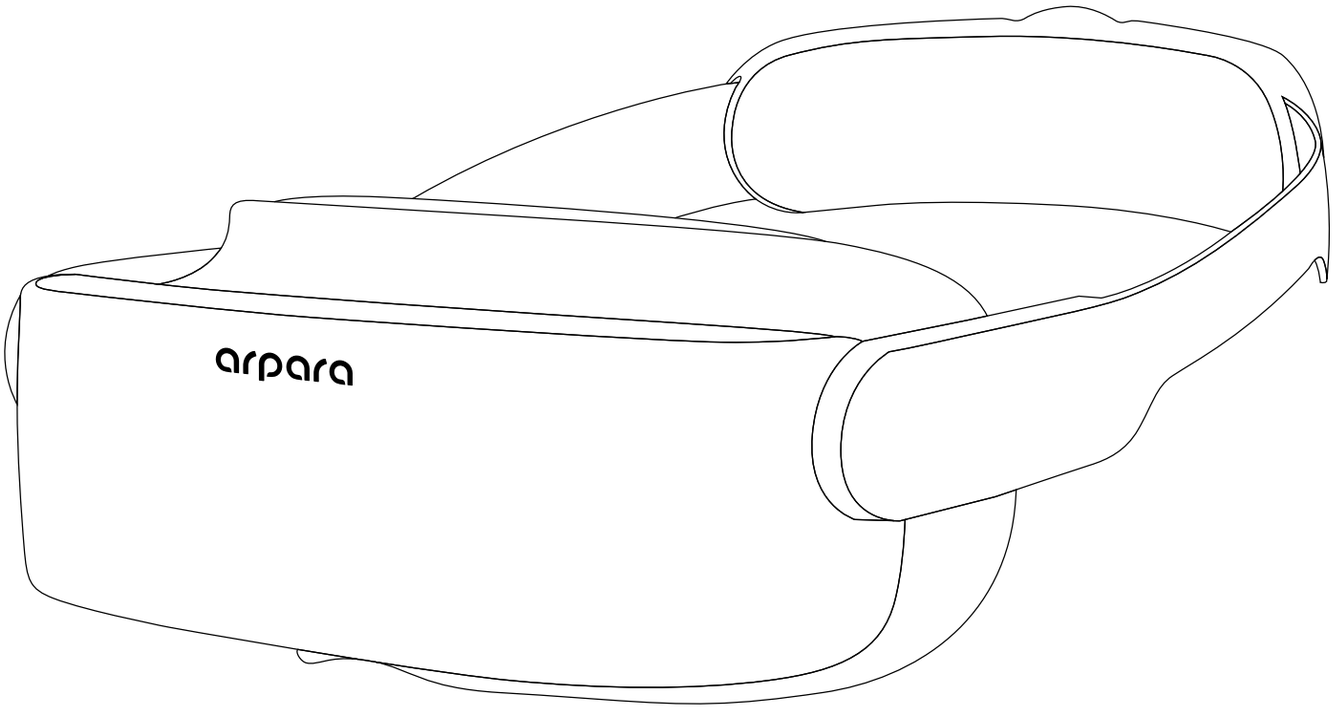

The arpara Tethered 5K is a stand-alone 3DoF PC VR headset supporting 5K resolution and up to 120 Hz refresh rate. It can be used for displaying, watching 2D/3D/360° videos, and playing 3DoF games. Combined with an arpara gaming kit, the VR headset can offer a 6DoF VR gaming experience. (To upgrade to 6DoF, please refer to the User Guide for the arpara Gaming Kit)

Buttons and settings

Top

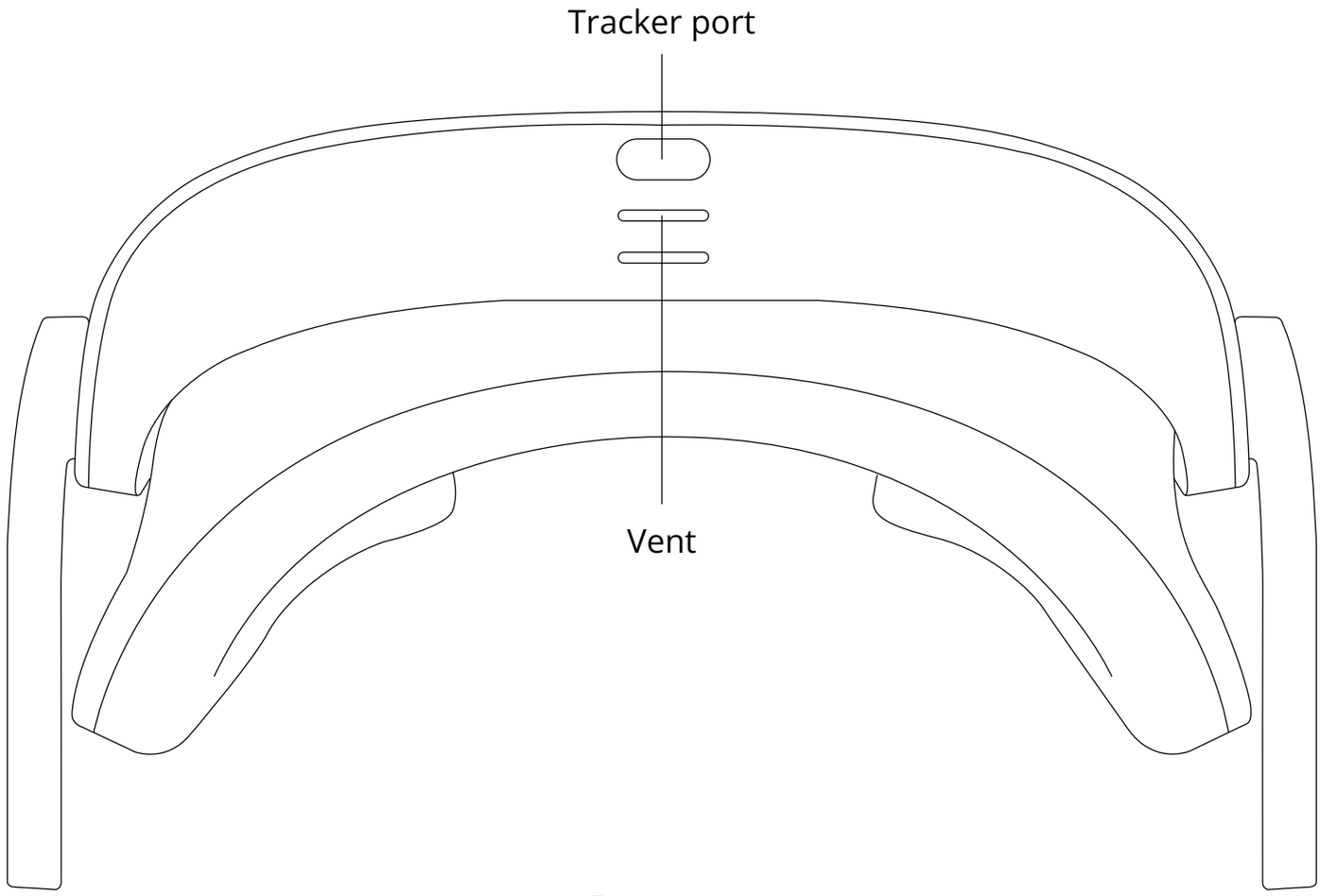
Tracker port
Vent

Bottom

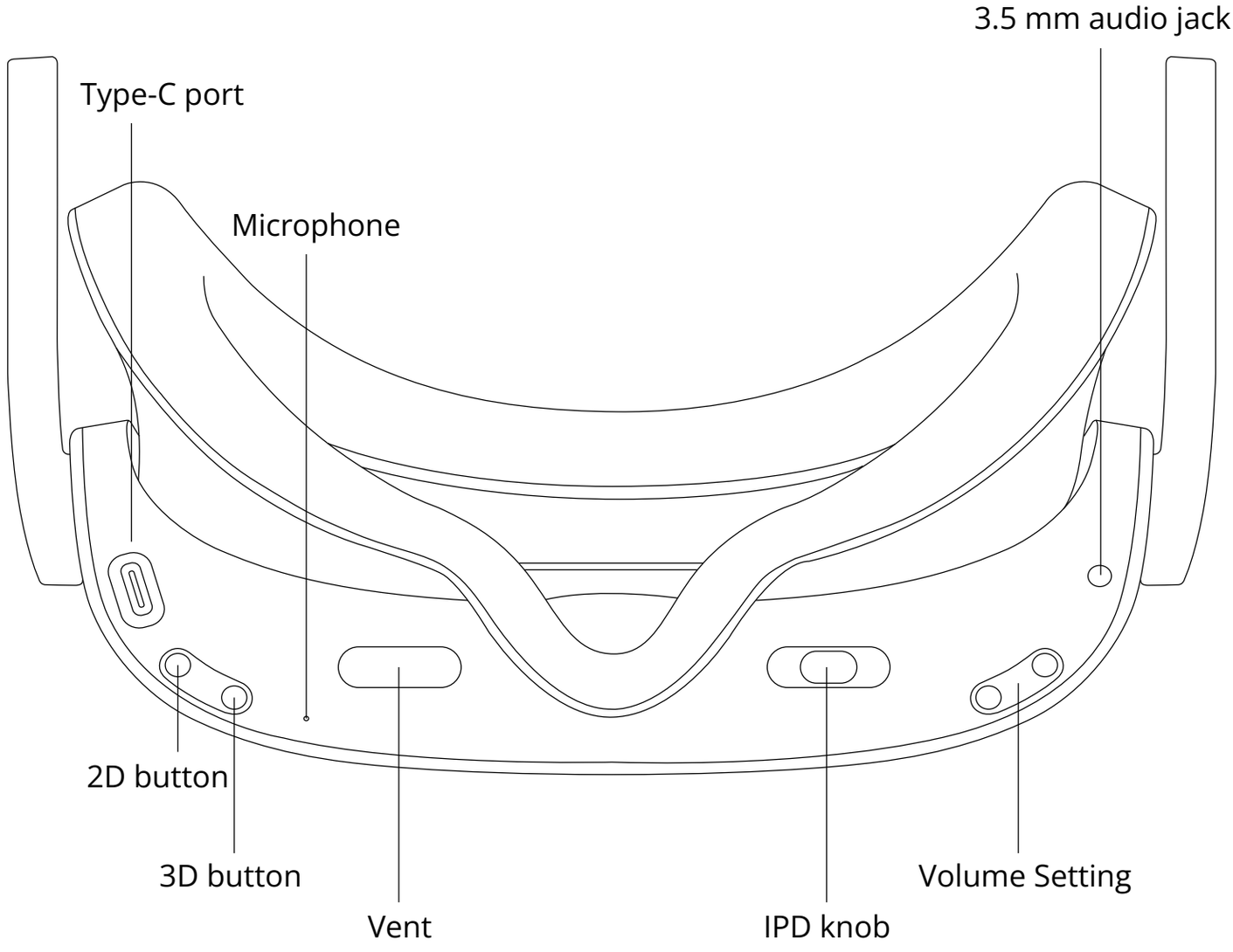
3.5 mm audio jack
Type-C port
Microphone
2D button
3D button
Vent
IPD knob
Volume Setting

Inside

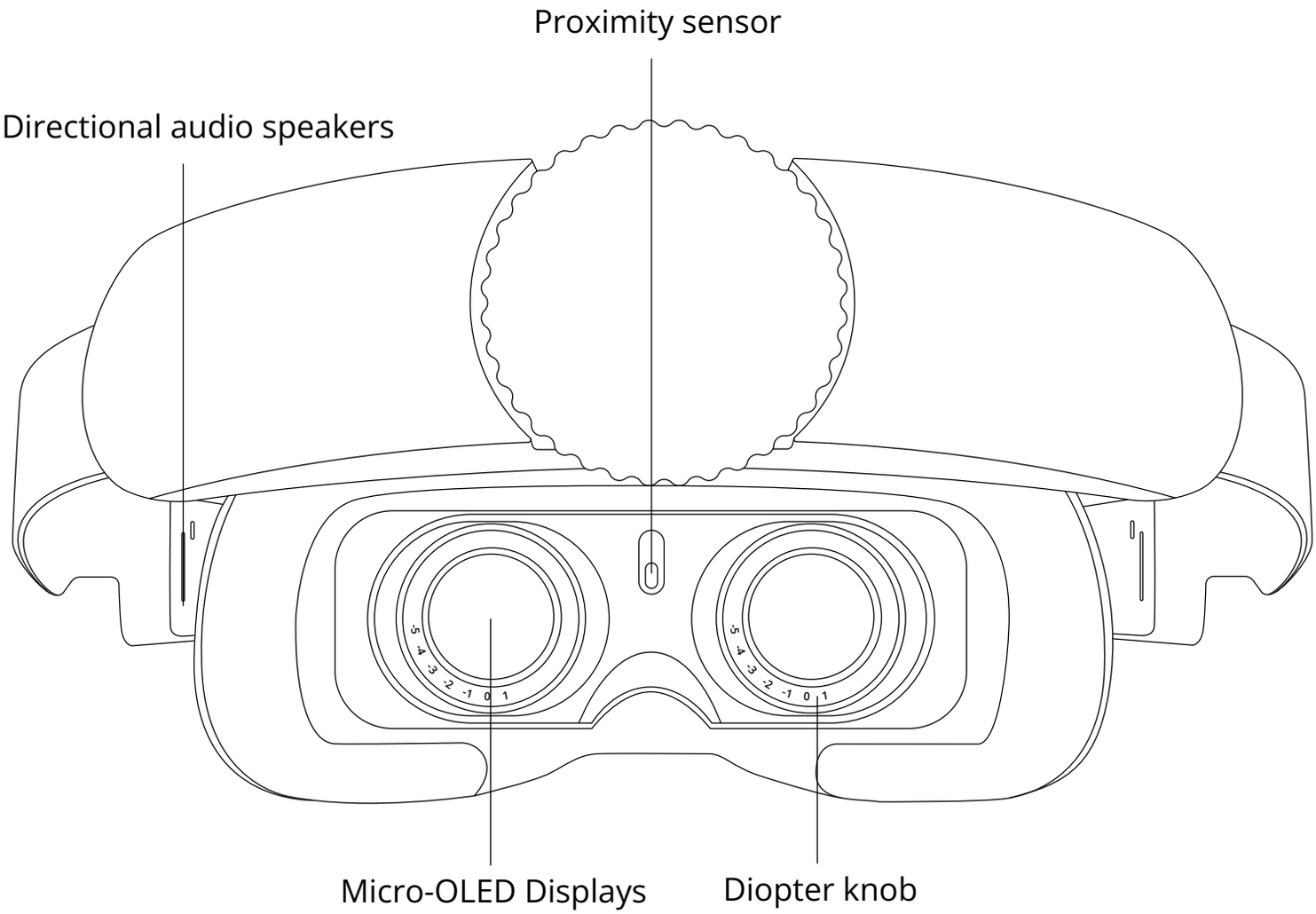

Wearing

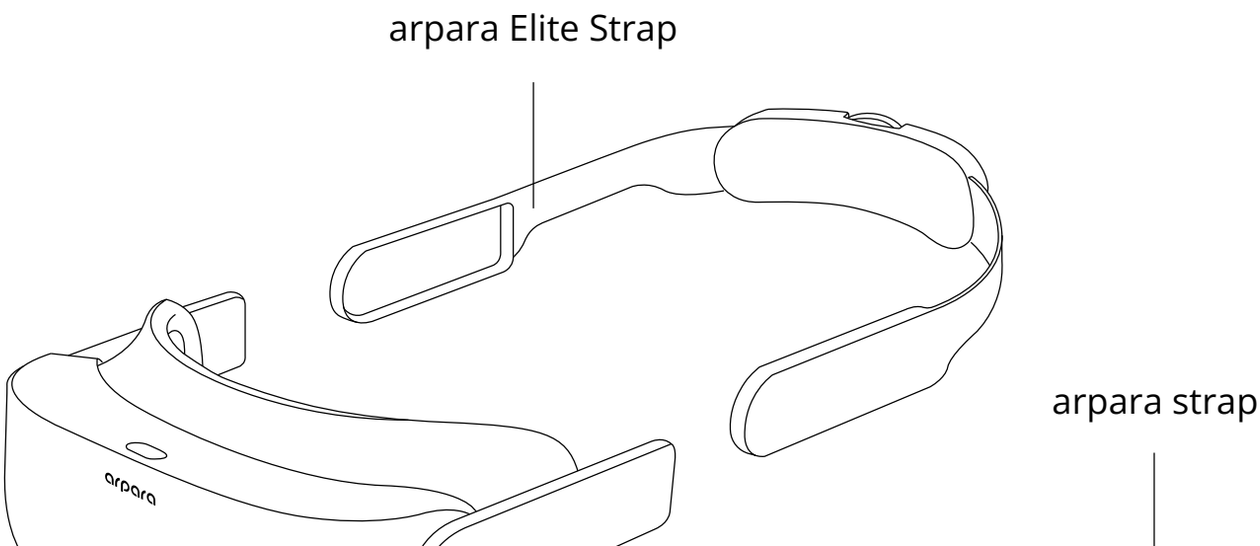

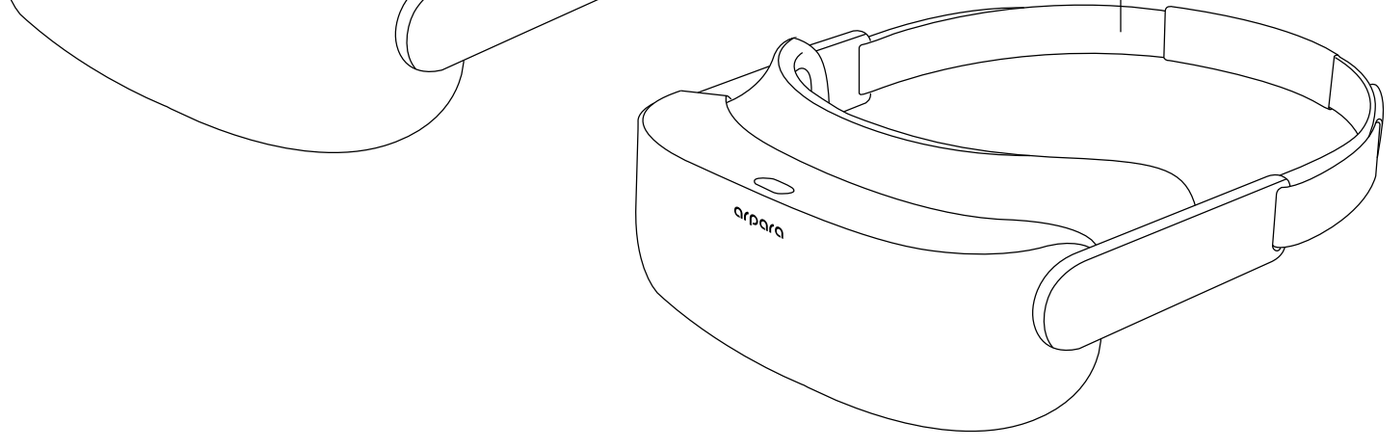

1) Switching between 2D & 3D modes

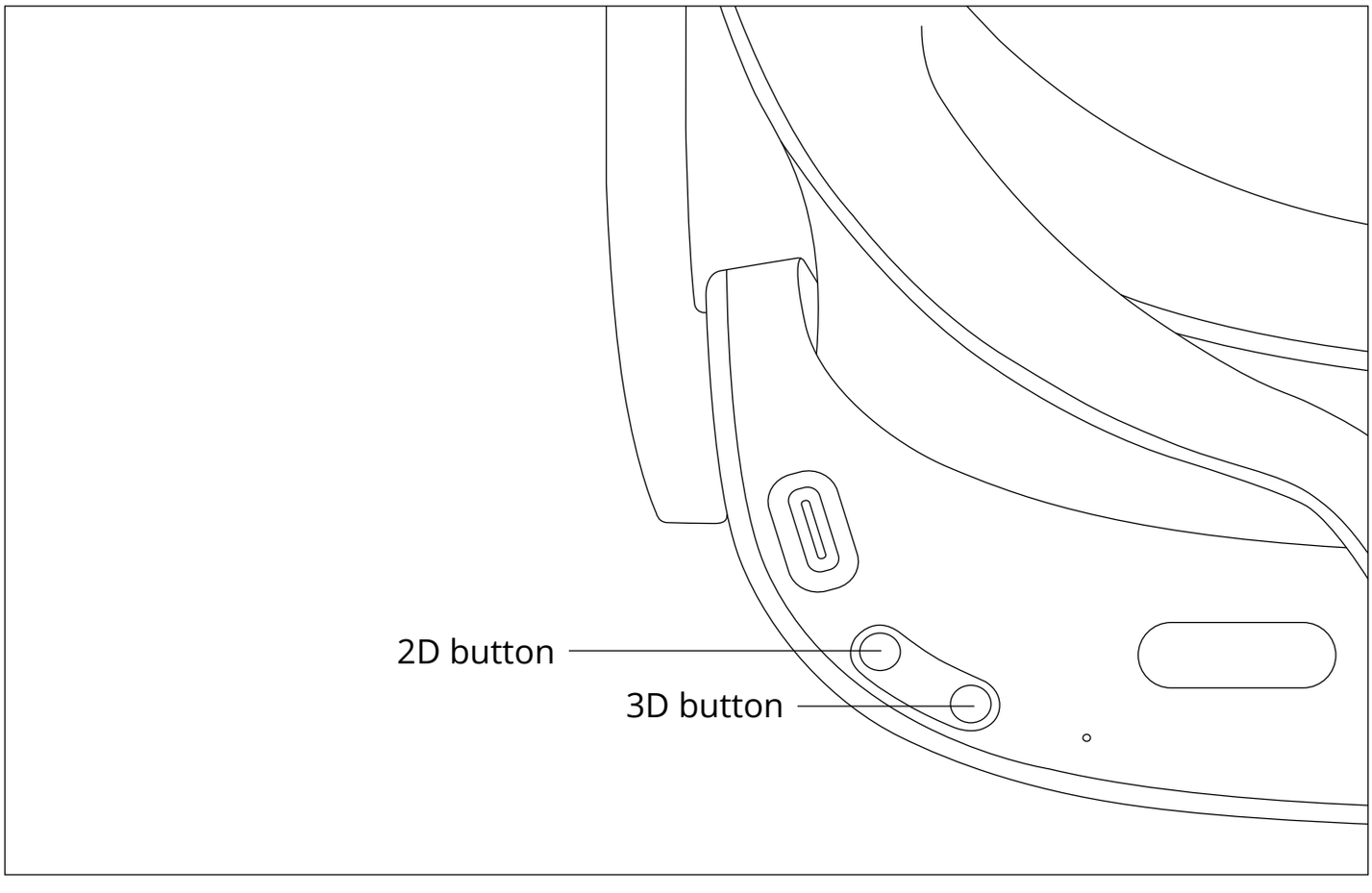

- The button at the lower-left corner of the VR headset is for changing resolution, which is 3840*1920 at a 60 Hz refresh rate by default (namely, 4K @ 60 Hz).
- When connected to a computer, the VR headset will work in 3D mode by default; normally, it will display a distorted computer desktop. After being connected to SteamVR, the arpara VR headset can display correctly. (Note: There is no such issue for connection with a mobile phone)

- You can change the VR headset's resolution in 2D or 3D mode to adapt to devices in different scenarios. Before changing the resolution, you must unlock the resolution settings.

To unlock, press and hold both the 2D button and the 3D button for 5 seconds. An [Unlock] alert on display indicates that the resolution setting is unlocked; likewise, the VR headset can be relocked.

- If the VR headset is connected to SteamVR, the user must choose 3D mode.
- If the VR headset is used as a display, the user can choose 2D mode.

Available resolutions	
Resolutions in 2D mode	2560*1440@60Hz
	1920*1080@60Hz
	1920*1080@60H scaling
	1920*1080@120Hz
	1920*1080@120Hz scaling

Resolution in 3D mode	5088*2544@70Hz
	3840*1920@60Hz
	3840*1080@60Hz
	3840*1080@60Hz scaling
	3840*1080@120Hz
	3840*1080@120Hz scaling
	5120*2560@30Hz

2) Other settings

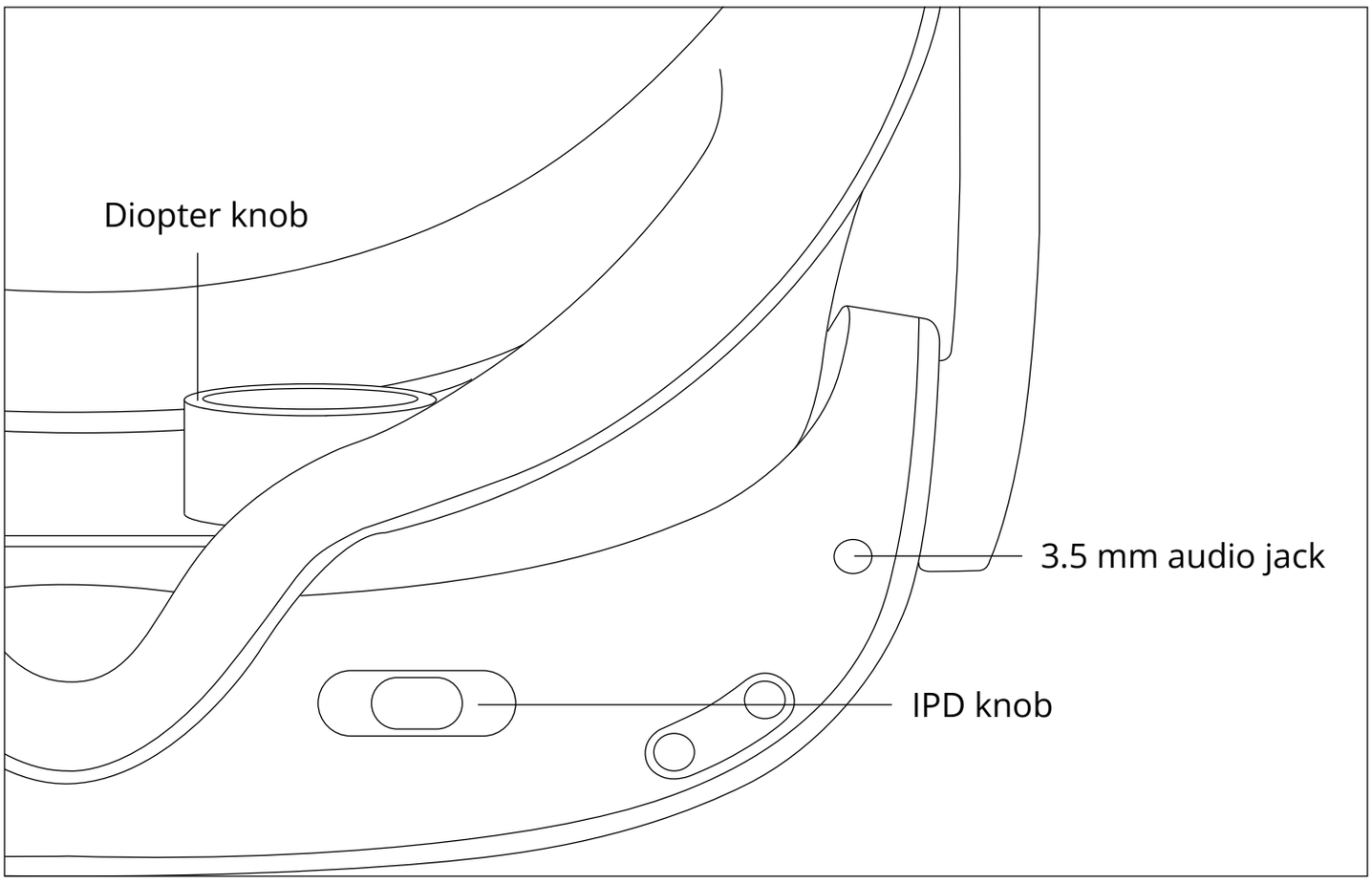

- When you see a picture in the VR headset, you can adjust the interpupillary distance (IPD) and the diopter until you get a clear image.

- The diopter is fully adjustable between 1D and -5D. Improper diopter settings may cause a bad experience.
- You can use 3.5 mm headphones by plugging into the 3.5 mm audio jack; otherwise, the sound will come out of the VR headset's directional audio speakers by default. (Maximum volume is set by default.)

Connect to mobile phone /computer

1) Connect the VR headset to a mobile phone for watching videos

- You can download arparahome to your mobile phone (from arpara's official website), install it, connect the VR headset to your mobile phone, then you can watch 2D, 3D, 180°, or VR videos on your mobile phone.
- You may connect the VR headset to an Android phone with an arpara Type-C Cable as shown in the figure below:

Android phone

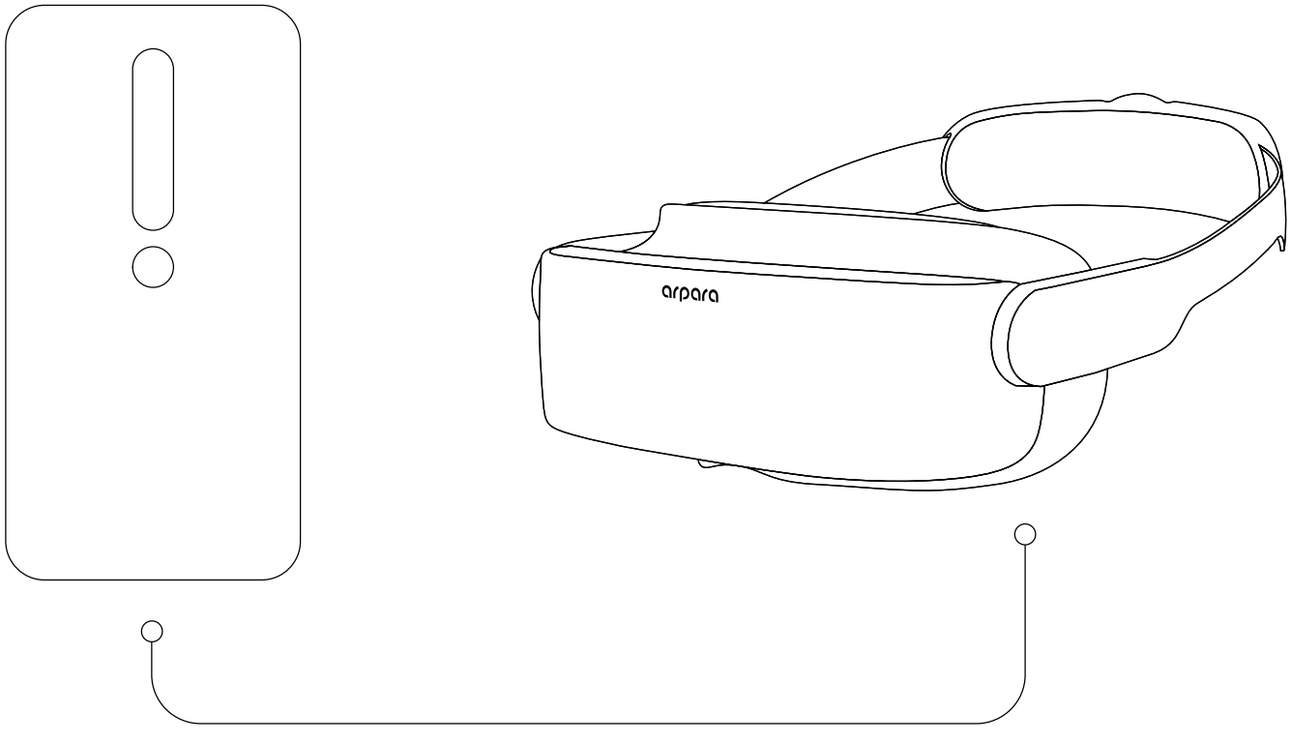

Currently, the following brands and models (Android with Type-C port and DisplayPort video output) are supported. Please refer to arpara's official website more update-to-date comparability list.

Huawei	Mate10, Mate10 Pro, Mate20, Mate20 Pro, Mate20X 5G, Mate30 4G/5G, Mate30 Pro 5G, Mate40, Mate40 Pro, P20, P20 Pro, P30, P30 Pro, P40, P40 Pro, P40 Pro+, honor V20, honor 30Pro, and honor Magic 3
Samsung	S8, S8+, S9, S9+, S10, Galaxy S20 5G, S21, S21 Ultra 5G, Note8, Note9, Note10, Galaxy Fold, and Galaxy Note20 Ultra 5G (S8, S8+, S9, S9+, S10, Note8, Note9, Note10, and Note10+ do not support arparahome APP)

OnePlus	7, 7T, 7Pro, 8, 8Pro, 9, 9Pro, 9R, and10Pro
OPPO	Find X2 Pro, Find X3 Pro, Reno 10x zoom, R17 Pro
Others	ZTE Axon 10 Pro 5G, Blackshark4Pro, Razer Phone 2, ROG Phone, ASUS ROG 5, SONY Xperia 1, Blackshark3s, Blackshark4

2) Connect the VR headset to a computer

2.1 Connect to a computer to watch local or stream videos

- A laptop with a Type-C port which supports DP video output can be connected with the VR headset via the Type-C Cable (1.5 m) included with the VR headset or an optional arpara Type-C Cable (3.5 m) for watching videos.

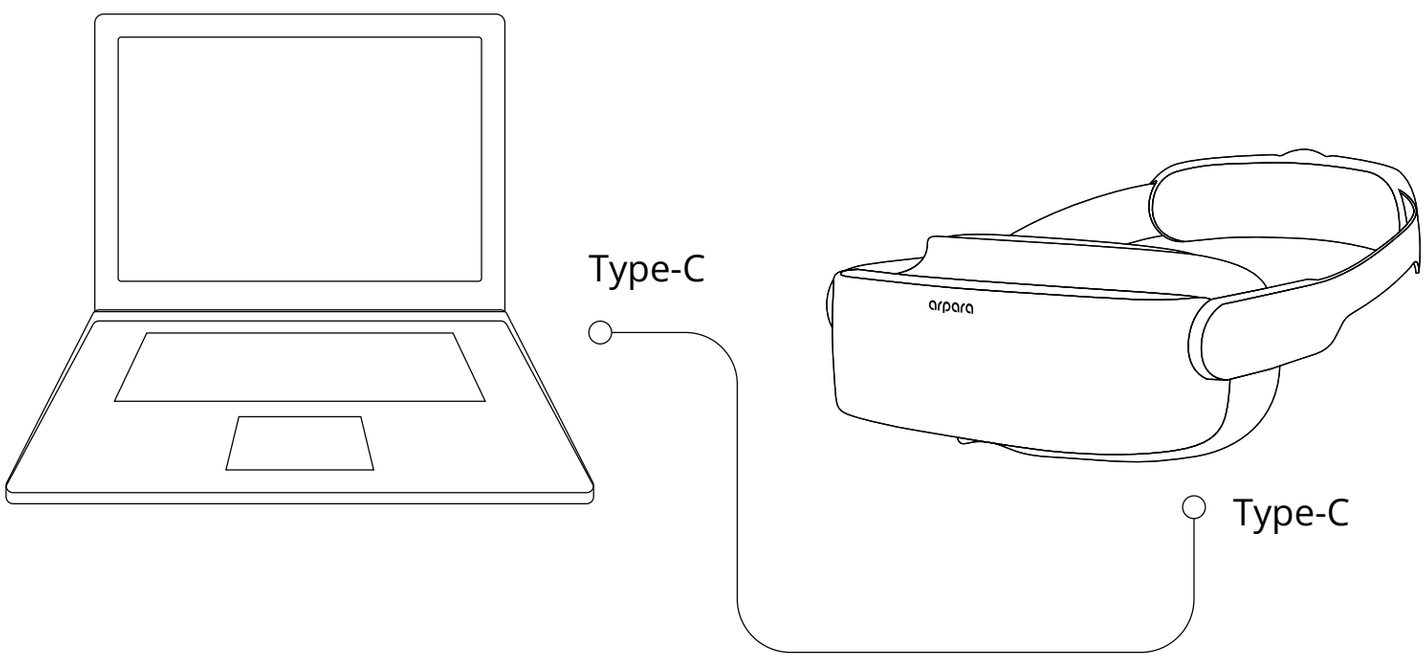

- A desktop with a DP Port can be connected to the VR headset via an arpara DP1.4 Cable for watching videos.

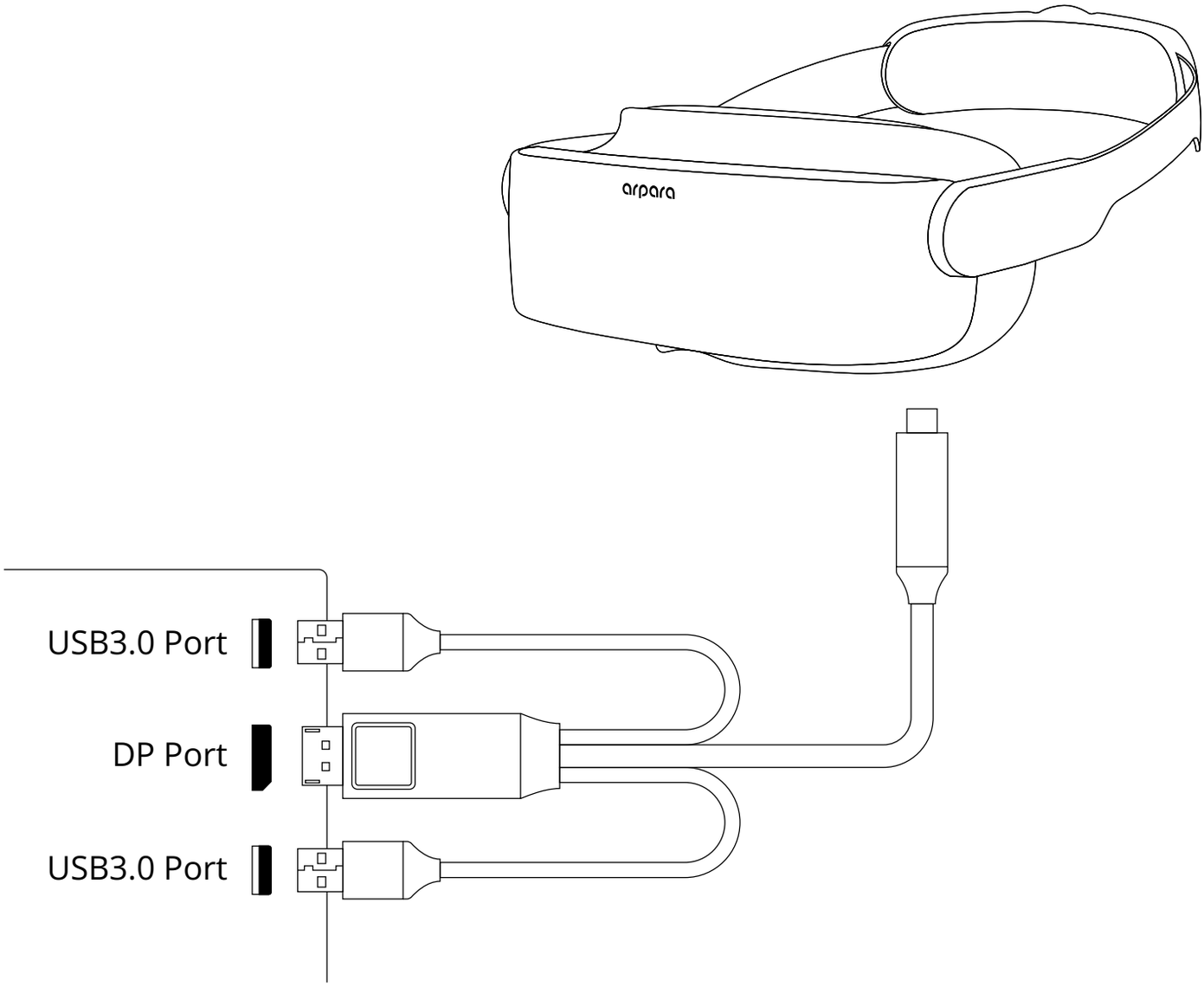

Minimum system requirements for desktops	
CPU	Intel Core i5 9400 or AMD Ryzen5 5600x or better
Memory	16 GB RAM or more
Operating system	Windows 10
GPU	NVIDIA GTX1080 or better (currently, AMD GPUs are not supported)

Video output	Standard DP port
Minimum system requirements for laptops	
CPU	Intel Core i7 9750H or AMD Ryzen5 5600H or better
Memory	16 GB RAM or more
Operating system	Windows 10
GPU	NVIDIA GTX1080 or better (currently, AMD GPUs are not supported)
Video output	Type-C port (supporting DisplayPort™ 1.4 and direct connection with a discrete graphics card)

You may view the properties by selecting Settings > System > Display > Advanced display settings as shown in the following figure:

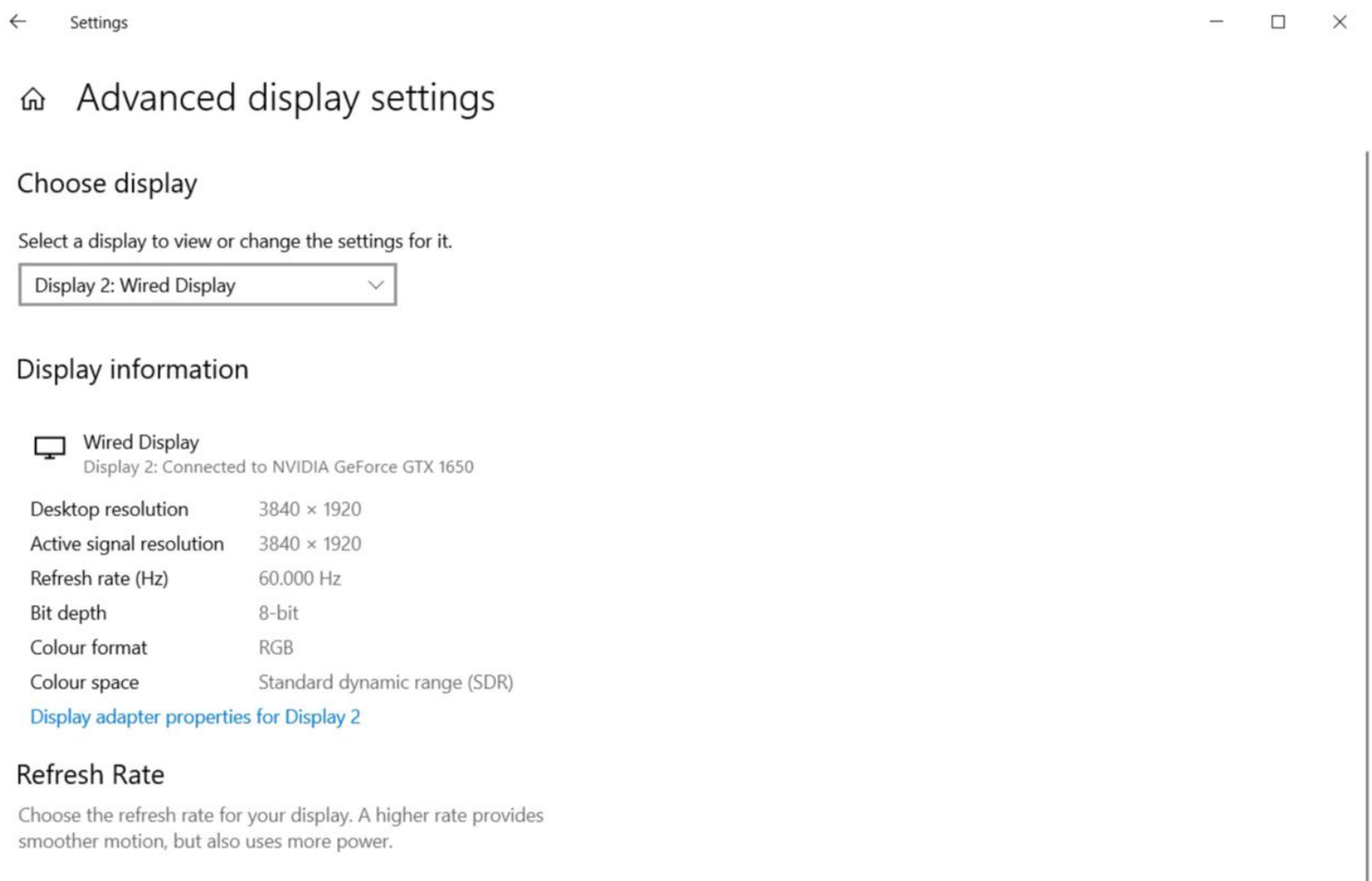

Note:

1) Your desktop can connect to the VR headset via the DP port, but only NVIDIA GPUs are supported currently.

2) For connecting your laptop to the VR headset, please make sure that the Type-C port is directly connected to a discrete graphics card.

3) The VR headset's default resolution is 3840*1920 in 3D mode; if changing to another resolution is needed, please unlock the resolution setting and use the 2D/3D button to change the resolution.

4) Data cannot currently be transferred over the Type-C ports on NVIDIA RTX20 graphics cards, and thus these graphic cards cannot be used with the VR headset.

5) When running SteamVR, please make sure that the VR headset’s resolution is set at 3840*1920 or 5088*2544, and “Extend these displays” in the “Multiple displays” area is selected for your computer.

Settings

Home

Find a setting

System

Display

Sound

Notifications & actions

Focus assist

Power & sleep

Battery

Storage

Tablet

Multi-tasking

Projecting to this PC

Shared experiences

Clipboard

Display

Night light settings

Windows HD Colour

Get a brighter and more vibrant picture for videos, games and apps that support HDR.

Windows HD Colour settings

Scale and layout

Change the size of text, apps and other items

250% (Recommended)

Advanced scaling settings

Display resolution

3840 × 1920 (Recommended)

Display orientation

Landscape

Multiple displays

Multiple displays

Extend these displays

Make this my main display