JN-GD24X Gaming desk

MOUNTING INSTRUCTIONS

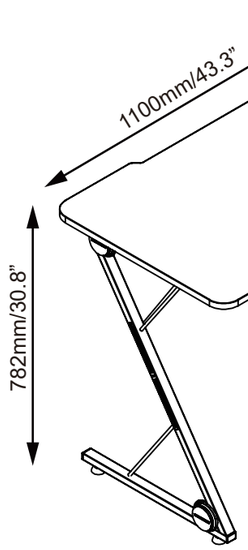

kg LB ≤80kg (≤176.4lbs)

CAUTION : DO NOT EXCEED MAXIMUM LISTED WEIGHT CAPACITY. SERIOUS INJURY OR PROPERTY DAMAGE MAY OCCUR.

PARTS LIST

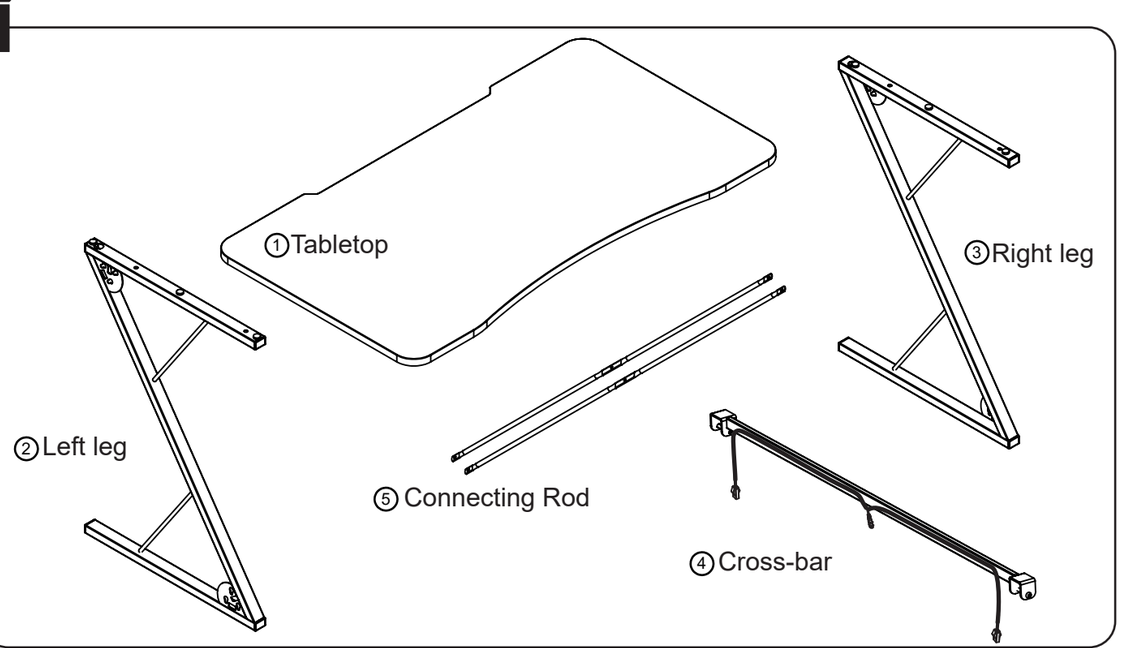

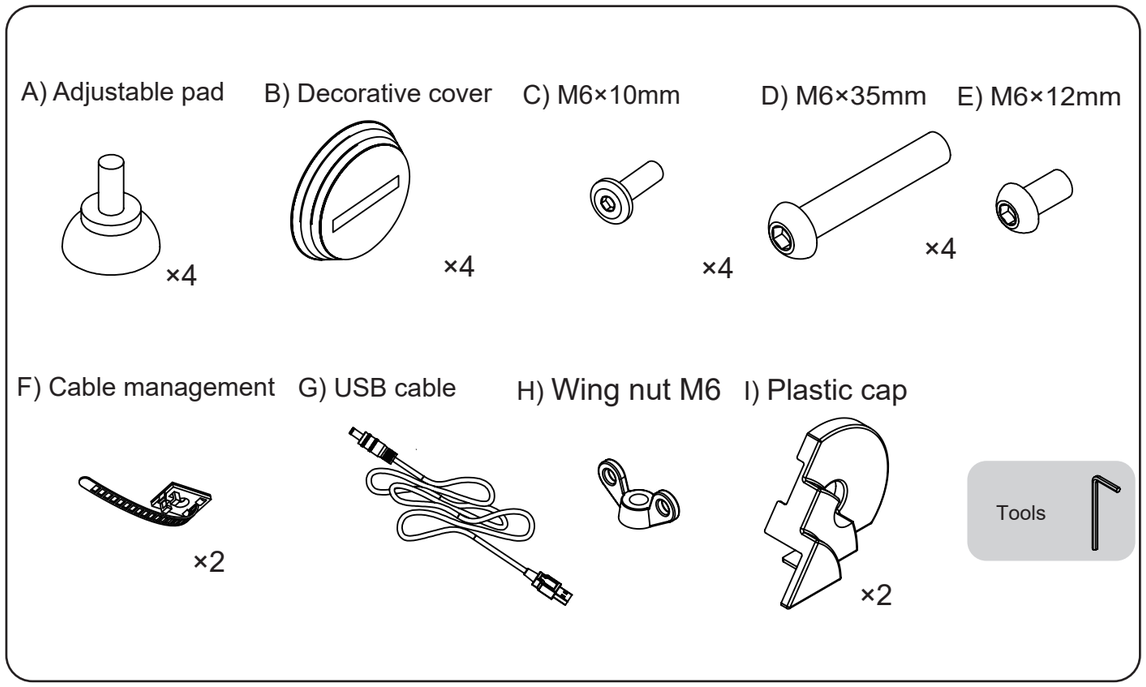

INSTALLATION STEPS

1

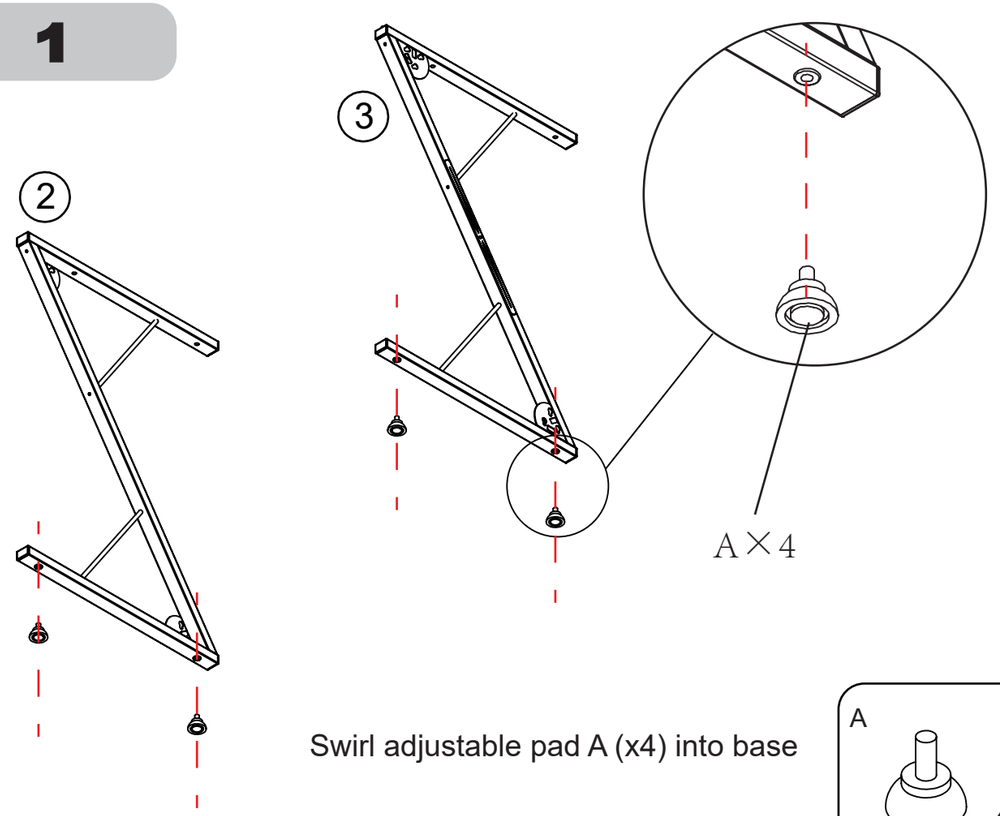

Swirl adjustable pad A (x4) into base

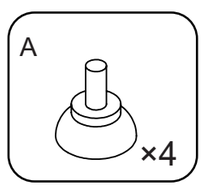

2

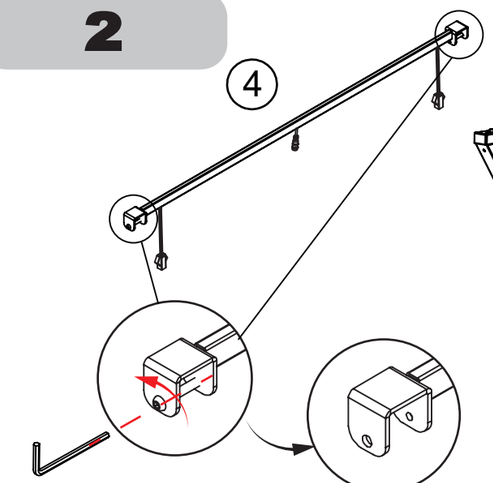

Unscrew the screws on
both sides of the cross-bar

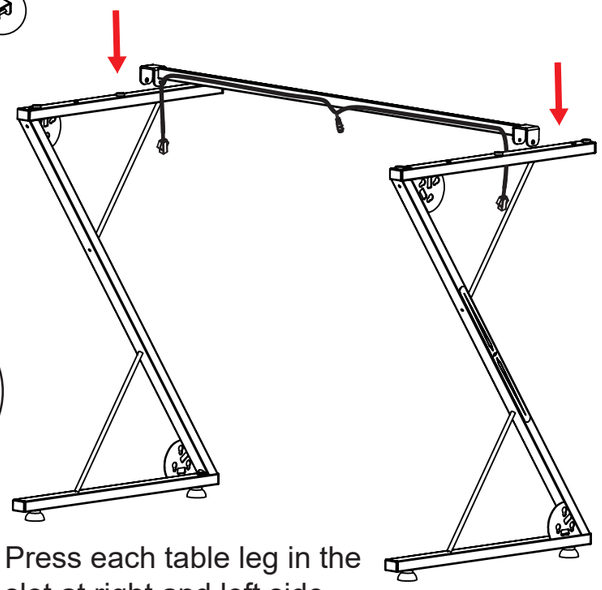

Press each table leg in the
slot at right and left side

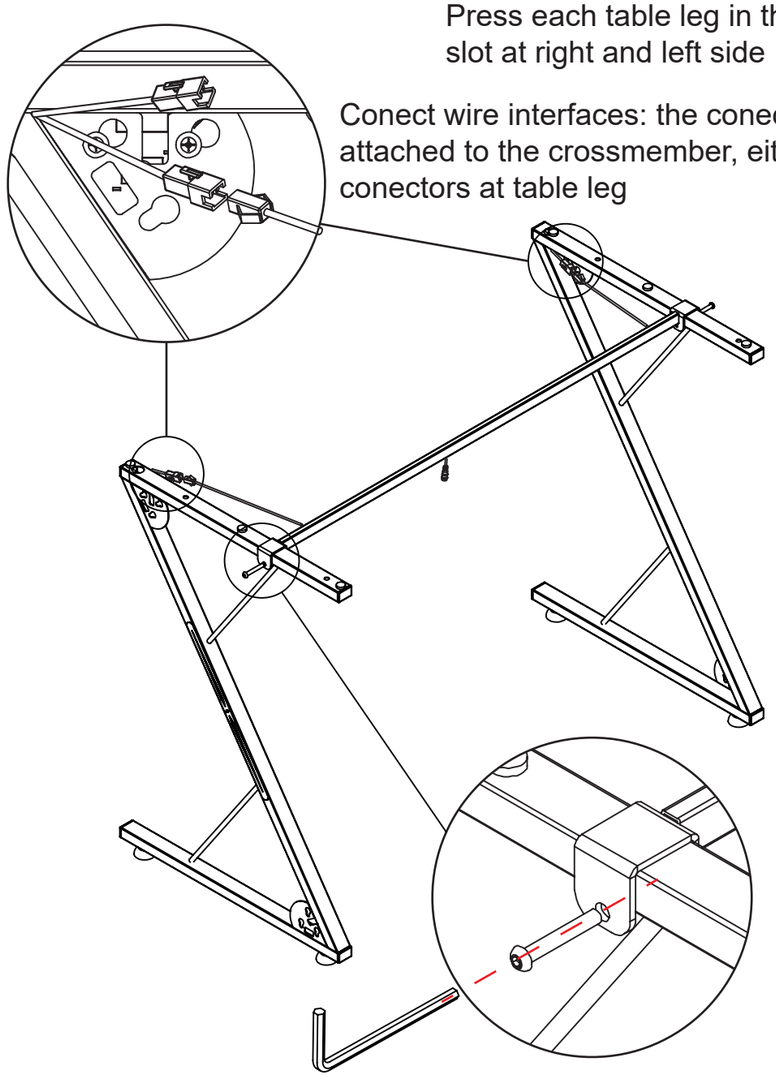

Conect wire interfaces: the conector of the wire
attached to the crossmember, either of the two
conectors at table leg

Snap the cross-bar
into the leg and lock
with screws

Tools

3

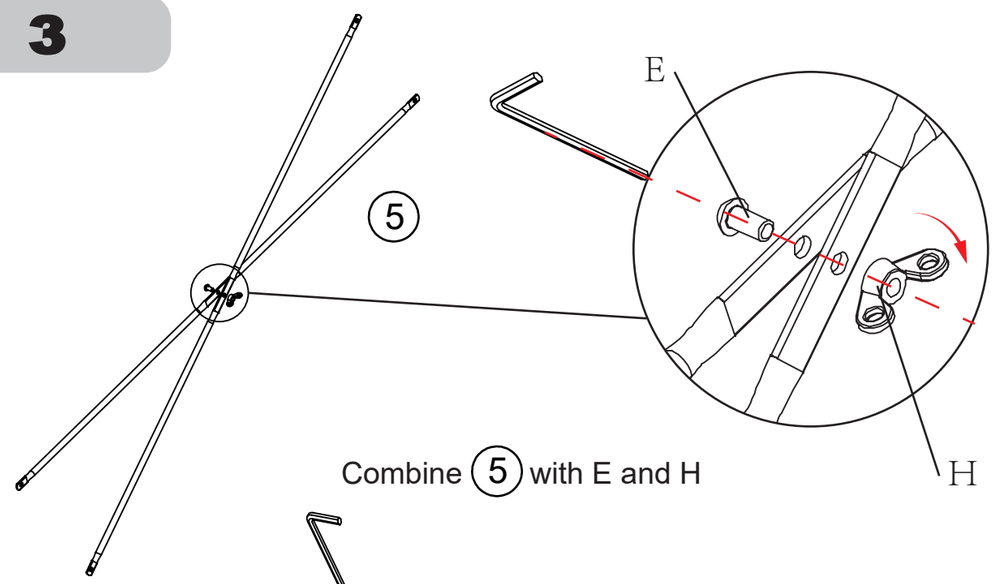

Combine 5 with E and H

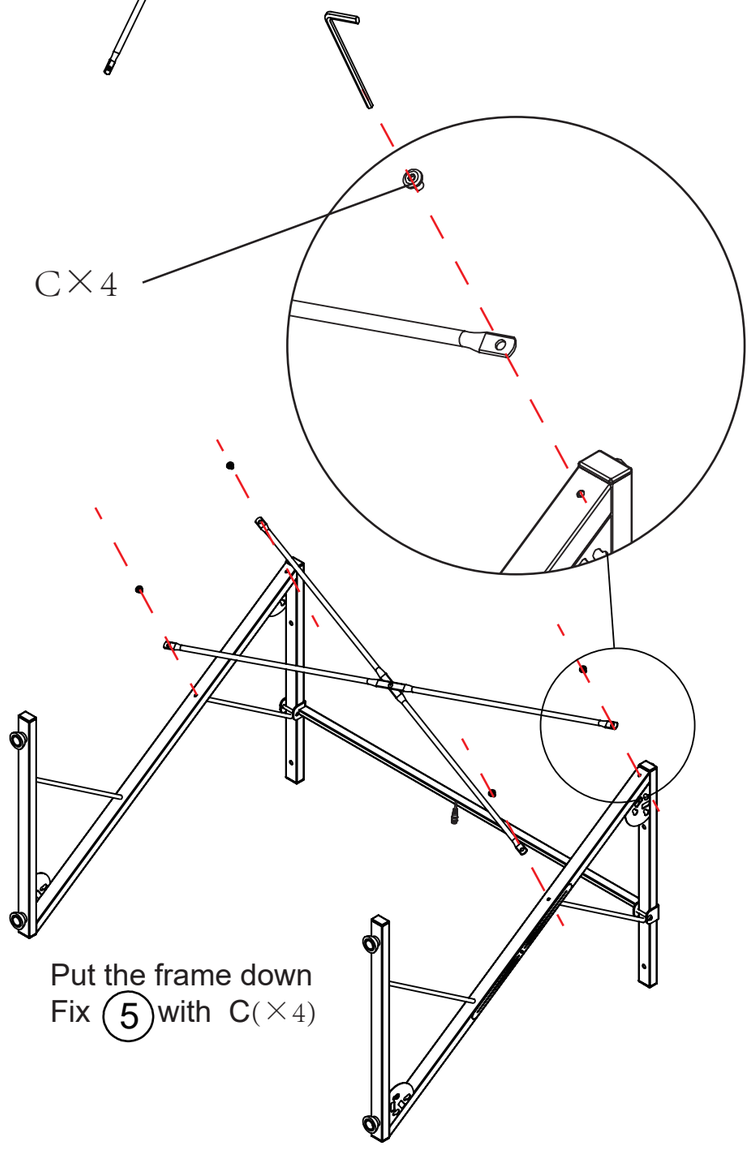

Put the frame down
Fix 5 with C(×4)

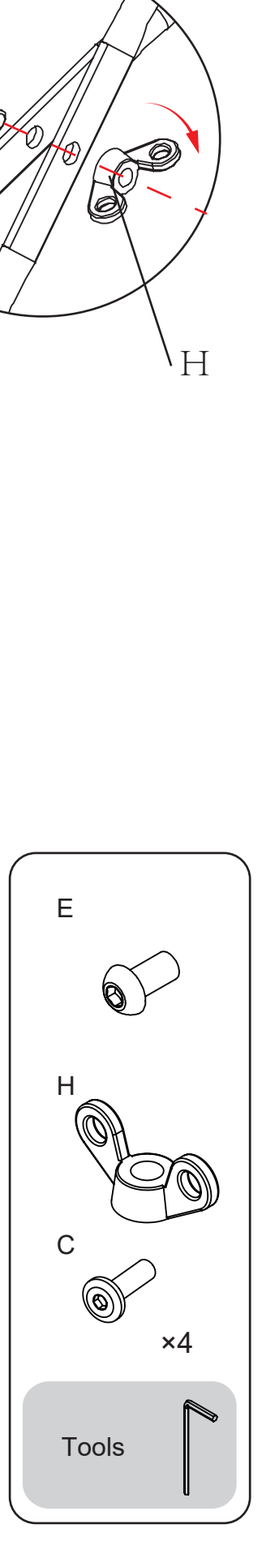

Tools

4

Conect wire interfaces: the conector of the wire attached to B , the other of the two conectors at table leg

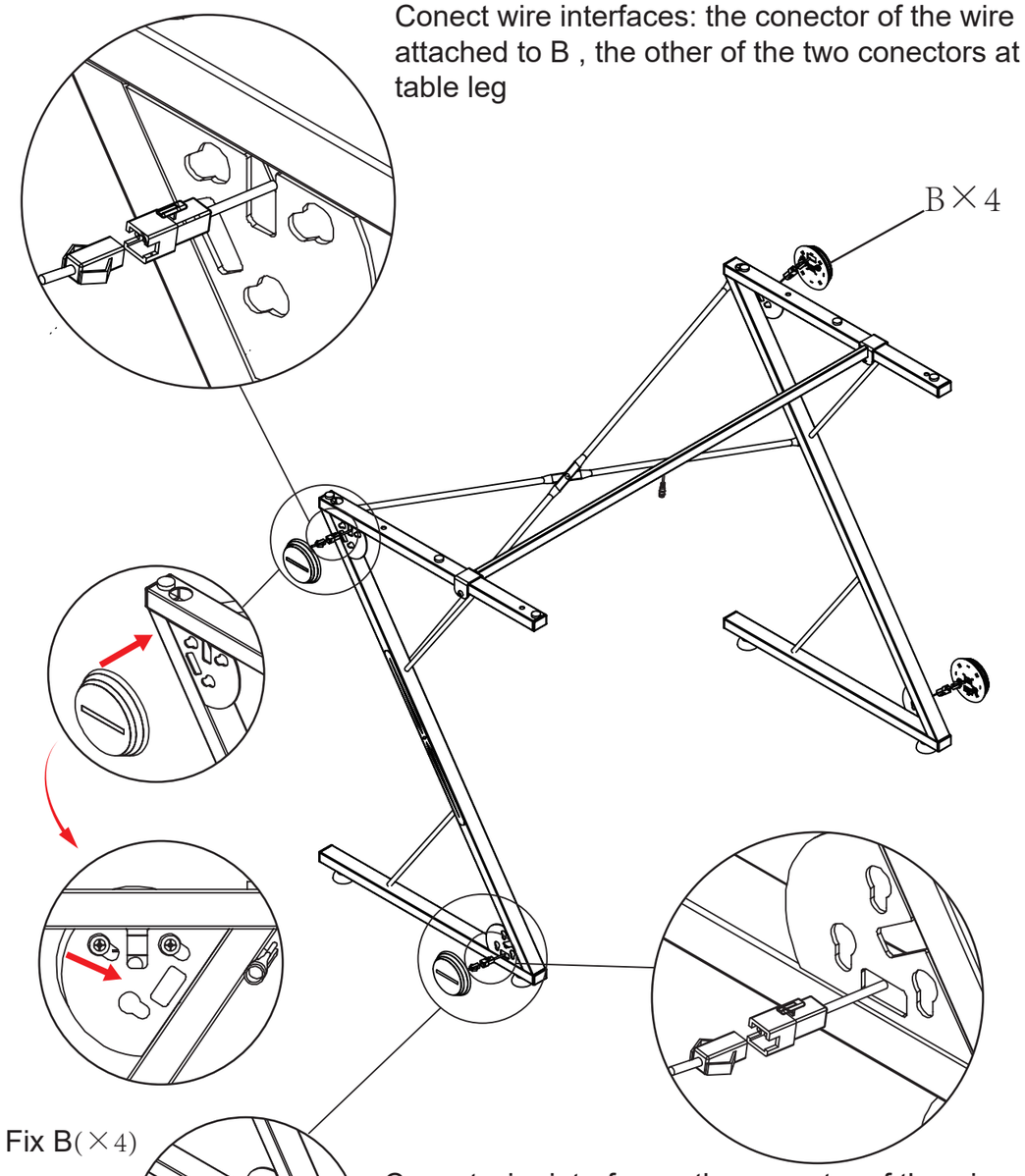

Conect wire interfaces: the conector of the wire attached to B

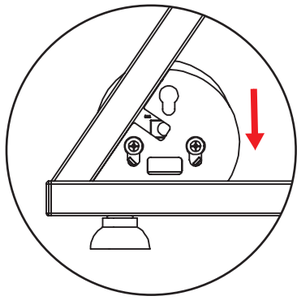

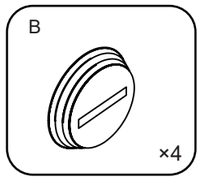

5

Fix ① with D(×4)

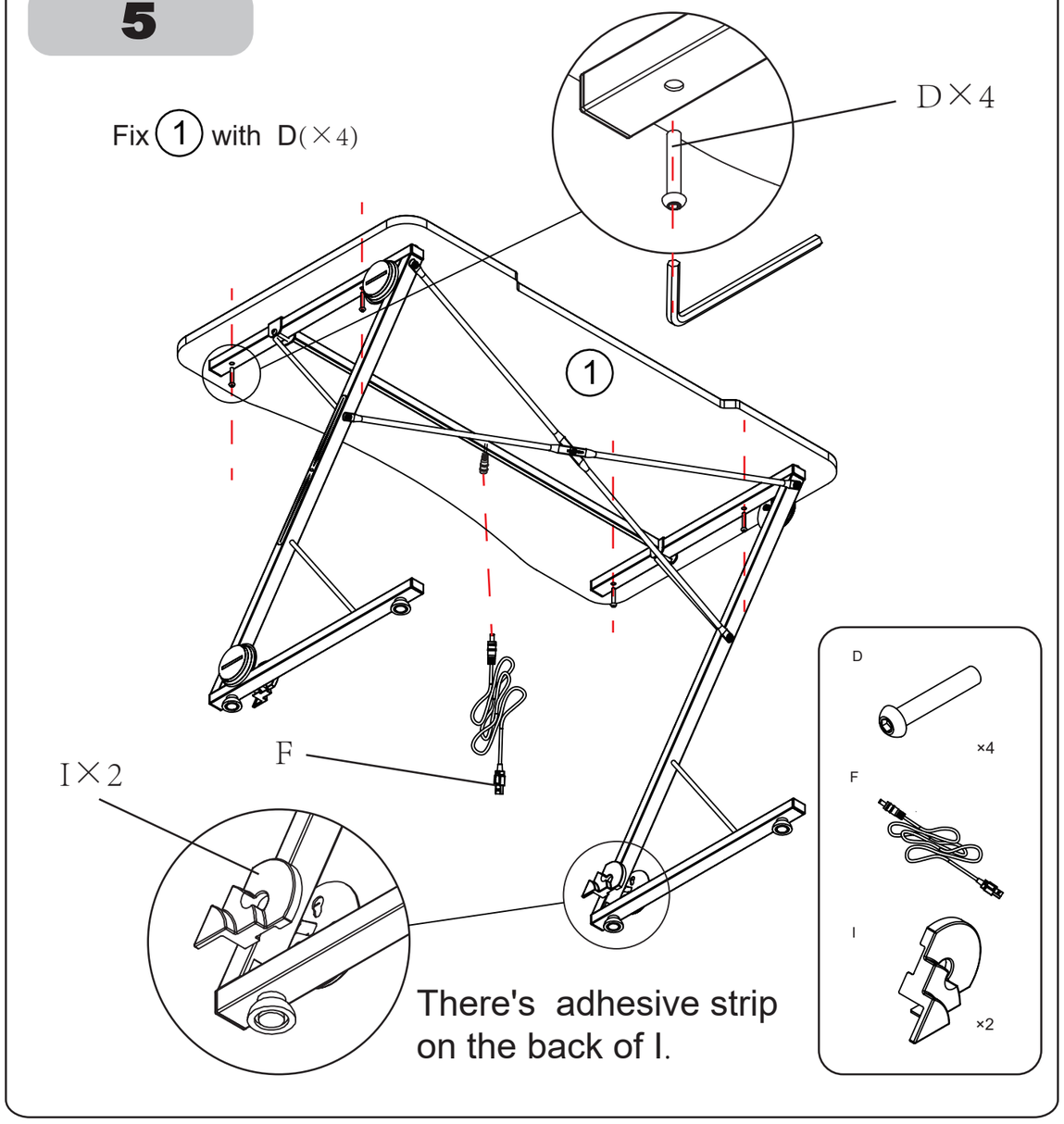

Tips
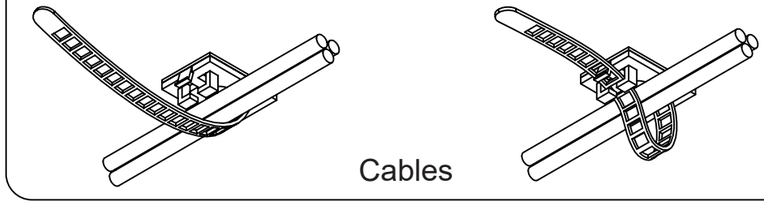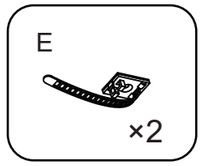
Uncover the back glue of E and stick it under the leg,
E can be used to arrange cables