SIRUI

影像随心 思锐随行

使用说明

3T-R遥控桌面三脚架

广东思锐光学股份有限公司

地址：广东省中山市五桂山第三工业区 邮编：528458
电话：0760-88897373 传真：0760-88207062 服务热线：400 830 2299
邮箱：info@sirui-photo.com 网址：www.sirui.com
投诉电话：18165639388
(仅限工作日 8:15~12:15,14:00~18:00)

产品清单

使用本产品前，请仔细检查产品包装内是否含以下所有物品，若有缺失，请联系客服或您的代理商。

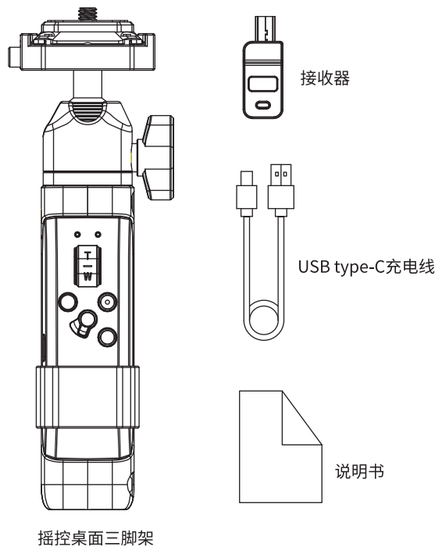

按键说明

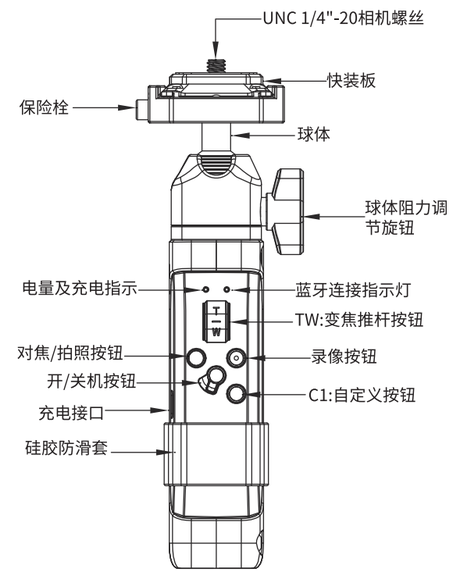

接收器

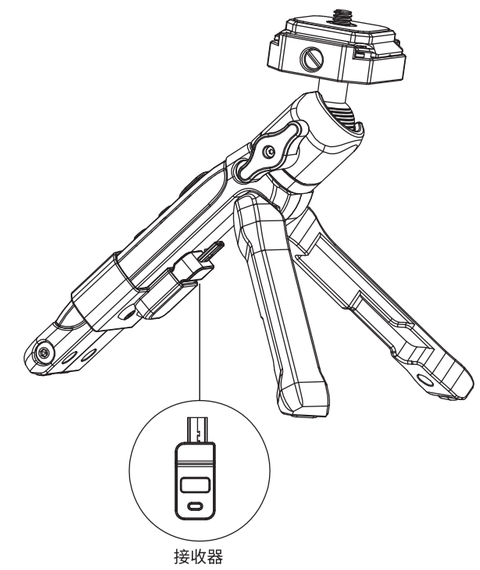

摇控器可拆卸

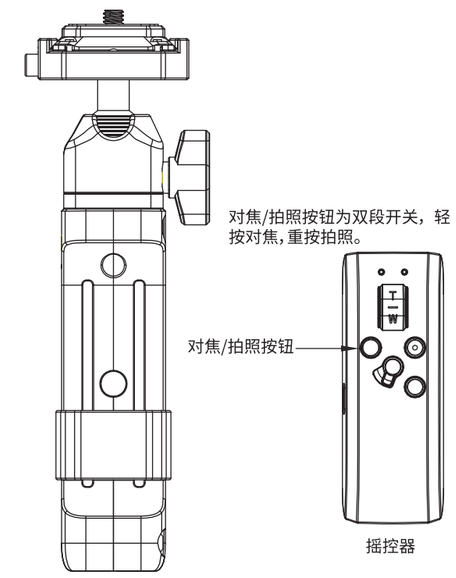

球体可以旋转

球体可以单方向90度竖拍，其它方向任意使用角度25度。

注意：在脚架打开支架放在任何平台上进行90度竖拍时需要手扶相机。

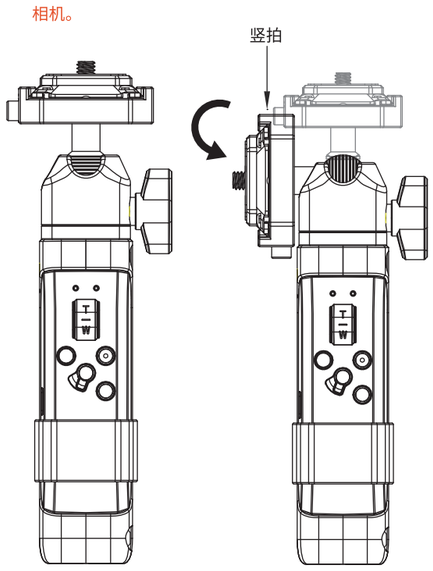

快装板取出或者安装

1.取出快装板时用手指常按住保险栓，另一支手拿出快装板取出即可。

2.安装快装板时同样用手指常按住保险栓，另一支手将快装板对准卡位插入即可；快装板要安装到位，防止意外脱落如下图示。

注意：快装板只限1000克以内的承重，超出承载重量有意外脱落风险，使用时请谨慎操作！

注意：快装板安装好后要与平台平齐，如没有平齐快装板会有滑落风险(如图示)

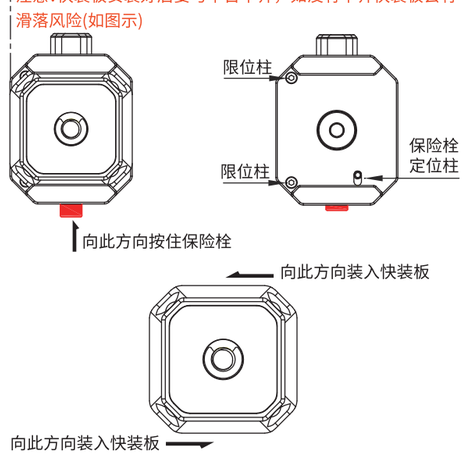

	配对方式	拍照	录像	轻按对焦	变焦	C1按钮功能
自带蓝牙索尼相机	1.确认遥控器开关按钮处于打开位置； 2.选择相机蓝牙设置—开启蓝牙—选择相机与蓝牙遥控器配对； 3.同时长按遥控器C1按钮＋录像按钮直到蓝色指示灯快闪后松手，右边指示灯常亮即配对完成。	√	√	√	√	与相机C1按钮相同
蓝牙接收器(仅适用索尼相机使用)	1.将接收器插入索尼相机的multi口； 2.确认遥控器开关按钮处于打开位置； 3.同时长按遥控器C1按钮＋录像按钮直到蓝色指示灯快闪完毕后松手，右边指示灯常亮即配对完成。	√	√	√	√	1.双击进入延时摄影，单击退出； 2.长按C1键3秒可关闭相机。
佳能相机	1.确认遥控器开关按钮处于打开位置； 2.将相机的驱动模式设为<遥控>或<自拍:10秒/遥控>； 3.选择相机蓝牙设置—开启蓝牙—选择相机与蓝牙遥控器配对； 4.同时长按遥控器C1按钮＋录像按钮直到蓝色指示灯快闪完毕后松手，右边指示灯常亮即配对完成。	√	√	√	√	无

• 是否可以保留多台索尼的配对信息？
否，只可保留最近一台使用的相机配对信息或接收器信息。

• 接收器的使用
把接收器插入索尼相机multi接口即可。

• 是否可以连接手机？
是，遥控器可以连接手机（华为手机可以控制变焦、拍照），其他手机仅限于控制手机拍照。

• 指示灯说明
① 左指示灯
• 闪烁4次，电量代表75%~100%；
• 闪烁3次，电量代表50%~75%；
• 闪烁2次，电量代表25%~50%；
• 闪烁1次，电量代表1%~25%。
② 右指示灯
• 常亮代表蓝牙配对成功，闪烁代表蓝牙配对失败。

• 相机适配
① 索尼相机（原生控制）
Alpha 7C，Alpha 7R IV，Alpha 7R III，Alpha 9，Alpha 6600，Alpha 6100，Alpha 7 III，Alpha 9 II，Alpha 6400，ZV-1，DSC-RX0M2，DSC-RX100M7。**（如果不支持原生控制的索尼相机请使用接收器进行控制）**
② 佳能相机
EOS M6 Mark II，EOS M50，EOS M50 Mark II，EOS M200，EOS R，EOS R5，EOS R6，PowerShot G5 X Mark II，PowerShot G7 X Mark III。**（佳能相机需要搭配电动变焦镜头才可以进行变焦的操作）**

规格与参数

名称	摇控桌面三脚架
型号	3T-R
尺寸(收纳尺寸)	174x58x39mm
重量	284g
最大负载	≤1000g
颜色	黑色
材质	铝合金、塑料

* 实验室环境测试，根据使用条件不同可能会有变化。

SIRUI SIRUI

INSTRUCTIONS

3T-R
Remote Control Tripod

Guangdong SIRUI Optical Co.,Ltd.

Address: The Third Industrial District, Wuguishan Town, Zhongshan City, Guangdong, China
Tel: 0086-760-88897373 Fax: 0086-760-88207062 Service Hotline: 0086-400-8302299
E-mail: info@sirui-photo.com http://www.sirui.com P.C: 528458

Packing List

The product package comes with the following items. If any item is found missing, please contact SIRUI or your local sales agent.

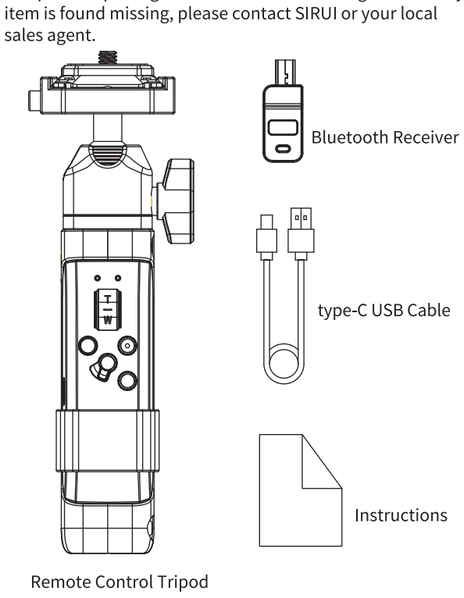

Buttons

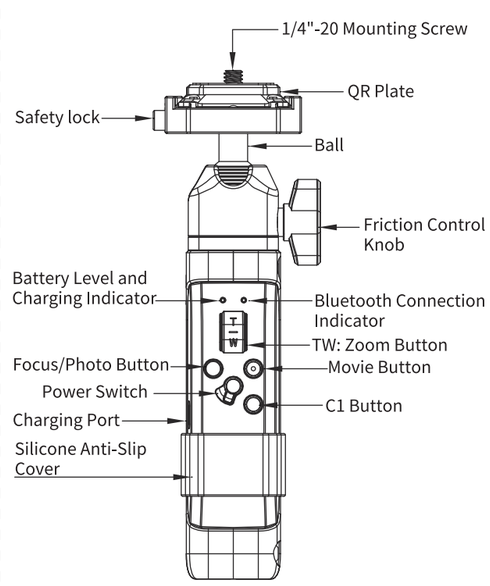

Bluetooth Receiver

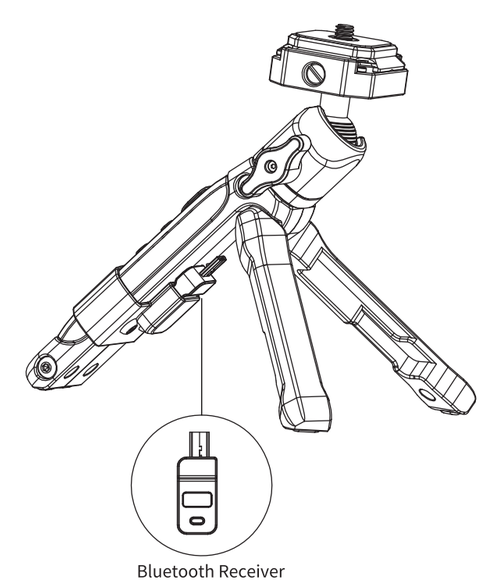

Detachable Remote Control

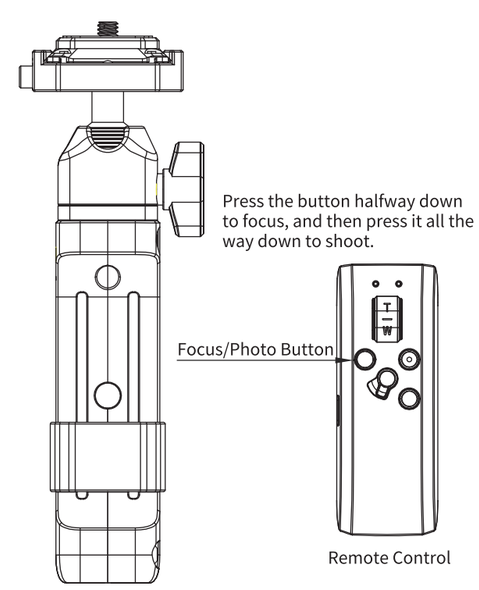

Angle Adjustment

The vertical notch on the left allows you to tilt the camera 90 degrees for vertical shooting. You can adjust the tilt angle of the camera by 25 degrees in any other direction.

Note: Be sure to hold the camera with your hand when shooting vertically with the tripod standing on the ground or table.

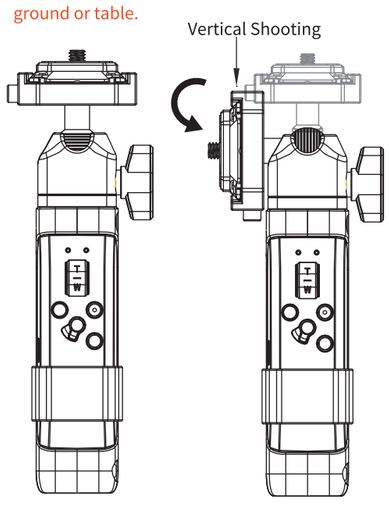

Installation or Removal of the QR Plate

1. Press and hold the safety lock with one hand, and take out the QR plate with the other.
2. Press and hold the safety lock with one hand, and push the QR plate into the base with the other. The QR plate should be fitted into the base firmly in case of accidentally falling.

Note:
The payload of the QR plate is 1000g. Cameras exceeding this weight may tip forward.

Note: The four sides of the installed QR plate should be flush with the base, otherwise the QR plate may fall off.

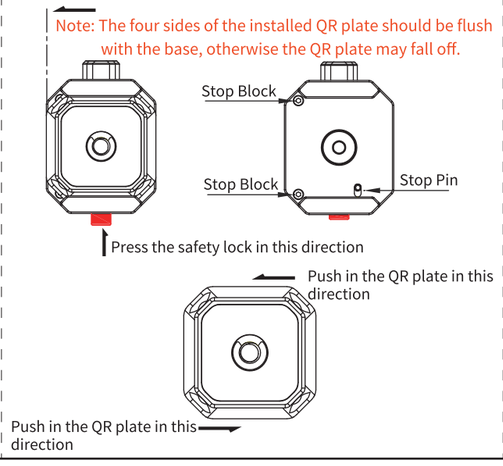

	How to attach?	Photo	video	Half press to focus	Zooming	C1 Button
Sony with Bluetooth	1. Make sure Remote-control is ON. 2. Choose Bluetooth setting on the camera->Turn on Bluetooth->pair camera with the Bluetooth Remote-control. 3. Long press C1 Button on the Remote-Control and the Record Button until the blue indicatior light flashes and then let go, if the indictator light on the right side flashes stably which means pairing completed.	√	√	√	√	Same with C1 Button of the camera
Bluetooth Receiver (for Sony only)	1. Insert the Receiver to the Multi-interface of Sony camera. 2. Make sure Remote-control is ON. 3. Long press C1 Button on the Remote-Control and the Record Button until the blue indicatior light flashes and then let go, if the indictator light on the right side flashes stably which means pairing completed.	√	√	√	√	1. Dubble press to enter Time-lapse function while single press to exit. 2. Long press C1 button three seconds to turn off the camera.
Canon	1. Make sure Remote-control is ON. 2. Set the camera drive mode to "remote or selfies:10 sec./remote". 3. Choose Bluetooth setting on the camera->Turn on Bluetooth->pair camera with the Bluetooth Remote-control. 4. Long press C1 Button on the Remote-Control and the Record Button until the blue indicatior light flashes and then let go, if the indictator light on the right side flashes stably which means pairing completed.	√	√	√	√	None

• Is it possible to keep the pairing information of multiple Sony devices?
Only the pairing information of the most recently connected Sony cameras can be kept.

• Receiver
Insert the receiver into the multi-port of Sony cameras.

• Can it be connected to the smartphone?
Yes, the remote control can be connected to the smartphone to take photos (Huawei smartphones can zoom or take photos via the remote control).

• Indicator lights
① Left Indicator Light
• Flickering 4 times indicates that the battery level is 75%~100%;
• Flickering 3 times indicates that the battery level is 50%~75%;
• Flickering 2 times indicates that the battery level is 25%~50%;
• Flickering once indicates that the battery level is 1%~25%;
② Right Indicator Light
• The indicator light flickers solid indicating Bluetooth is connected, while flickering means Bluetooth is not connected.

• Camera Compatibility
① SONY cameras
Alpha 7C，Alpha 7R IV，Alpha 7R III，Alpha 9，Alpha 6600，Alpha 6100，Alpha 7 III，Alpha 9 II，Alpha 6400，ZV-1，DSC-RX0M2，DSC-RX100M7
（A receiver is required for those Sony cameras with no native Bluetooth.）
② CANON cameras
EOS M6 Mark II，EOS M50，EOS M50 Mark II，EOS M200，EOS R，EOS R5，EOS R6，PowerShot G5 X Mark II，PowerShot G7 X Mark III。**（Match the auto zoom lens with Canon cameras to zoom.）**

Specifications

Name	Remote Control Tripod
Model	3T-R
Folded Size	174x58x39mm
Weight	284g
Max. Load	≤1000g
Color	Black
Material	Aluminum Alloy、Plastic

* Battery life above refers to the lab environment, the specific time will vary under different circumstances.