PREPARED BY: DATE	SHARP	SPEC No. LC96Y14
		FILE No.
APPROVED BY: DATE	LIQUID CRYSTAL DISPLAY GROUP SHARP CORPORATION	ISSUED NOV. 29. 1996
		PAGE 17 Pages
		APPLICABLE DIVISION
	SPECIFICATION	■DUTY PANEL DEVELOPMENT CENTER □TFT DEVELOPMENT CENTER □LCD PRODUCTS DEVELOPMENT CENTER □EL PRODUCTION DEPT.

SPECIFICATION FOR
Passive Matrix LCD Module

Model No.

LM32019T

□CUSTOMER'S APPROVAL

DATE _____

BY _____

PRESENTED
BY 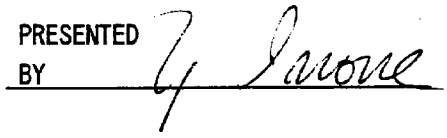

Y. Inoue
Department General Manager
Engineering Department 2
DUTY Panel Development Center
NARA Liquid Crystal Display Group
SHARP Corporation

RECORDS OF REVISION	SPEC No. LC96Y14	MODEL No. LM32019T
	DOC. FIRST ISSUE NOV. 29. 1996	
	IDENT. DATA No.	

DATA	SPEC REVISED No.	REVISED No.	REF. PAGE	SUMMARY	CHECK & APPROVAL

1. Application

This data sheet is to introduce the specification of LM32019T, Passive Matrix type LCD module.

2. Construction and Outline

Construction: 320×240 dots display module consisting of a LCD panel, PWB(printed wiring board) with electric components mounted onto, TAB(tape automated bonding) to connect the LCD panel and PWB electrically, and plastic chassis with CCFT back light and bezels to fix them mechanically.

Outline : See Fig. 7

Connection : See Fig. 7 and Table 5

3. Mechanical Specifications

Table 1

Parameter	Specifications	Unit
Outline dimensions Note 1)	166.0(W)×109.0(H)×7.5(D)MAX	mm
Viewing area	121.0(W)×91.6(H)	mm
Active area	115.17(W)×86.37(H)	mm
Display format	320×240 Dots	
Dot size	0.33(W)×0.33(H)	mm
Dot spacing	0.03	mm
Base color Note 2)	Dark Bule Note 3)	-
Mass	160	g

Note 1) Excluded the mounting portions and connectors.

Note 2) Due to the characteristics of the LC material, the colors vary with environmental temperature.

Note 3) Negative-type display

Display data "H" : ON → transmission

Display data "L" : OFF → light isolation

4. Absolute Maximum Ratings

4-1 Electrical absolute maximum ratings

Table 2

Parameter	Symbol	MIN.	MAX.	Unit	Remark
Supply voltage (Logic)	VDD-VSS	0	7	V	Ta=25 ℃
Supply voltage (LCD)	VDD-V0	0	32	V	Ta=25 ℃
Input signal voltage	VIN-VSS	0	VDD	V	Ta=25 ℃
Supply voltage (CCFT)	VL	0	1.500	V_{rms}	Ta=25 ℃
Supply current (CCFT)	IL	0	6.5	mA_{rms}	Ta=25 ℃

4-2 Environmental Conditions

Table 3

Item	Tstg.		Topr.		Remark
	MIN.	MAX.	MIN.	MAX.	
Ambient temperature	-25 ℃	+60 ℃	0 ℃	+45 ℃	Note 4)
Humidity	Note 1)		Note 1)		No condensation
Vibration	Note 2)		Note 2)		3 directions (X/Y/Z)
Shock	Note 3)		Note 3)		6 directions (±X±Y±Z)

Note 1) Ta≦40 ℃.....95 % RH Max.
Ta>40 ℃.....Absolute humidity shall be less than Ta=40 ℃/95 % RH.

Note 2)

Table 4

Frequency	10 Hz~57 Hz	57 Hz~500 Hz
Vibration level	-	9.8 m/s^2
Vibration width	0.75 mm	-
Interval	10 Hz~500 Hz~10 Hz/11 min	

2 h for each direction of X/Y/Z (6 h as total)

Note 3) Acceleration : 490 m/s^2
Pulse width : 11 ms
3 times for each direction of ±X/±Y/±Z

Note 4) Care should be taken so that the LCD module may not be subjected to the temperature out of this specification.

5. Electrical Specifications

5-1 Interface signals

Table 5-1 CN1(LCD)

Pin No	Symbol	Description	Level
1	S	Scan start-up signal	"H"
2	CP1	Input data latch signal	"H"→"L"
3	CP2	Data input clock signal	"H"→"L"
4	NC	-	-
5	DISP OFF	Display Control signal	"H" → Display ON
6	D0	Display data signal	"H"(ON), "L"(OFF)
7	D1		
8	D2		
9	D3		
10	VDD	Power supply for Logic	+5V
11	VSS	Ground potential	-
12	VEE	Power supply for LCD drive	(+17～26V)

Table 5-2 CN2(CCFT)

Pin No	Symbol	Description	Note
1	VFT1	Power supply for CCFT back light (HOT)	for Backlight
2	NC	-	
3	VFT2	Power supply for CCFT back light (GND)	

* Used Cable : AWG26 UL STILE 3579

Used connector CN1 : 12 pin, 1.25 mm pitch, FFC
CN2 : BHR-03VS-1 (JST)

Mating connector CN1 : 5597-12APB, 5597-12CPB (MOLEX)
CN2 : SM03-BHS-1-TB (JST)

5-2 Electrical characteristics of LCD panel

Table 6

Parameter	Symbol	Conditions	MIN.	TYP.	MAX.	Unit
Supply voltage (Logic)	VDD-VSS	Ta=0~45 ℃	4.75	5	5.25	V
Supply voltage (LCD drive) Note 1)2)	VEE-VSS	Ta= 0 ℃	21	23.4	25.8	V
		Ta= 25 ℃	19.7	21.9	24.1	V
		Ta= 45 ℃	18.5	20.6	22.7	V
Input signal voltage	VIN	"H" level	0.8VDD	-	VDD	V
		"L" level	0	-	0.2VDD	V
Input leakage current	IIL	"H" level	-	-	20	μA
		"L" level	-20	-	-	μA
Supply current (Logic)	IDD	Note 3)	-	1.2	1.8	mA
Supply current (LCD drive)	IEE		-	3.5	5.3	mA
Power consumption	Pd	Note 3)4)	-	82	123	mW

Note 1) The viewing angle θ at which the optimum contrast is obtained can be set by adjusting VEE-VSS. Refer to 7-Note 2 for the definition of θ.

Note 2) The voltage at which the optimum contrast is obtained (VEE-VSS) is different in individual modules. And it changes because of temperature. Therefor need adjust the voltage at which the optimum contrast is obtained (VEE-VSS) in individual modules.

Note 3) Under the following condition.;

VDD-VSS=5.0 V, VEE-VSS=Vmax (Refer to P.13 about Vmax)

Frame frequency=80 Hz, Ta=25 ℃

Display pattern=1 bit checker

Display pattern

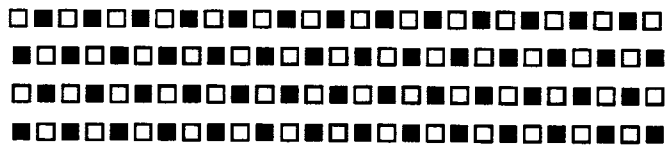

measuring circuit :

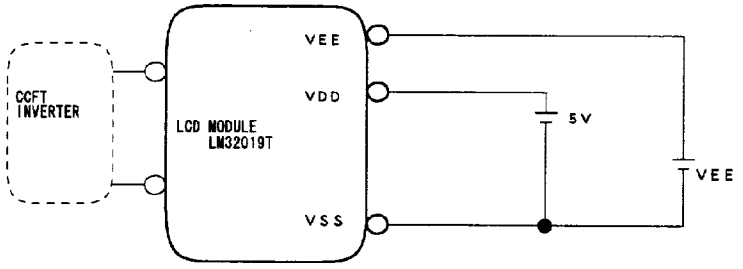

Note 4) Excluded The backlight power consumption.

Note 5) Refer to Page.14 for Characteristics of CCFT back light.

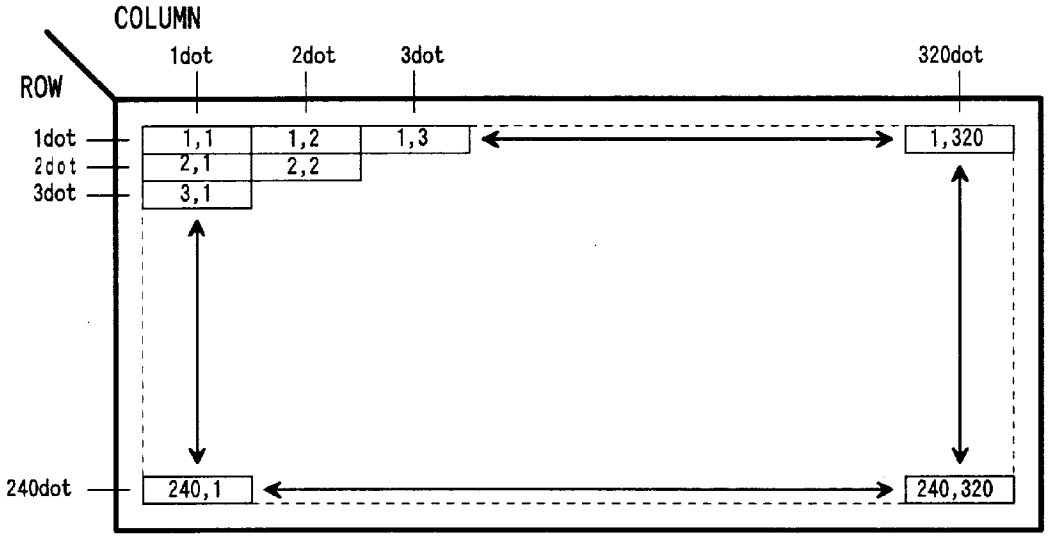

Note) 1,2 means 1st row 2nd clumn dot.

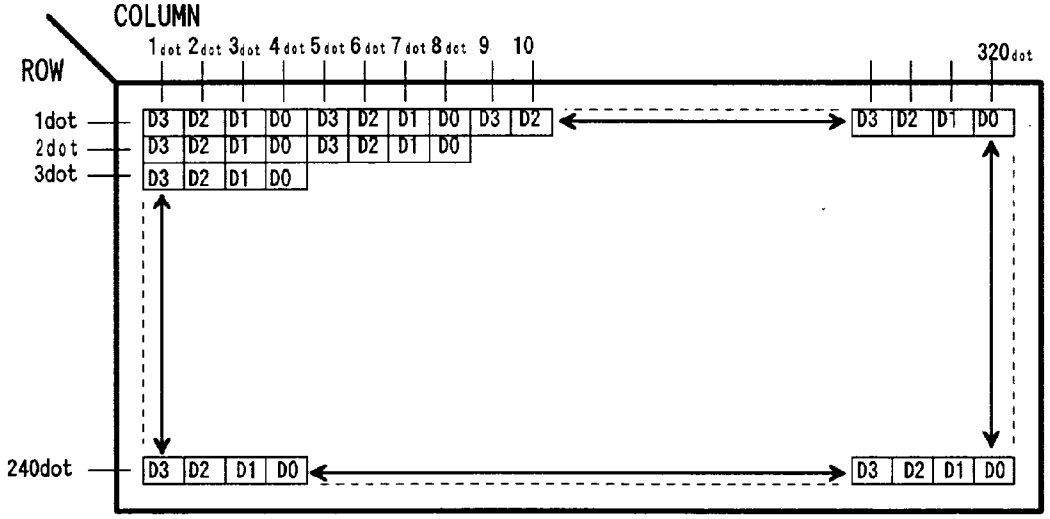

Fig. 1 Dot chart of display area

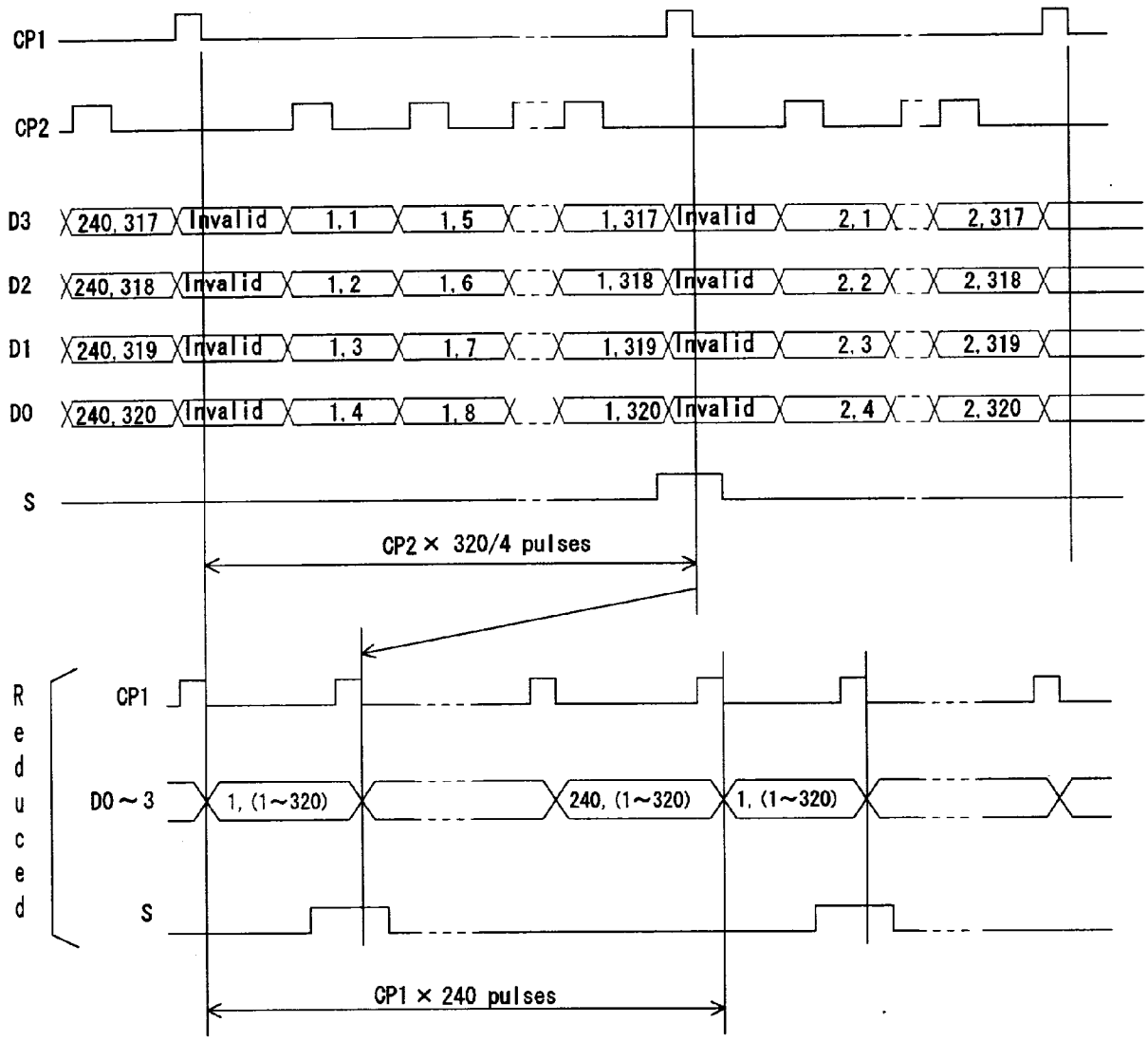

Fig. 2 Data input timing chart

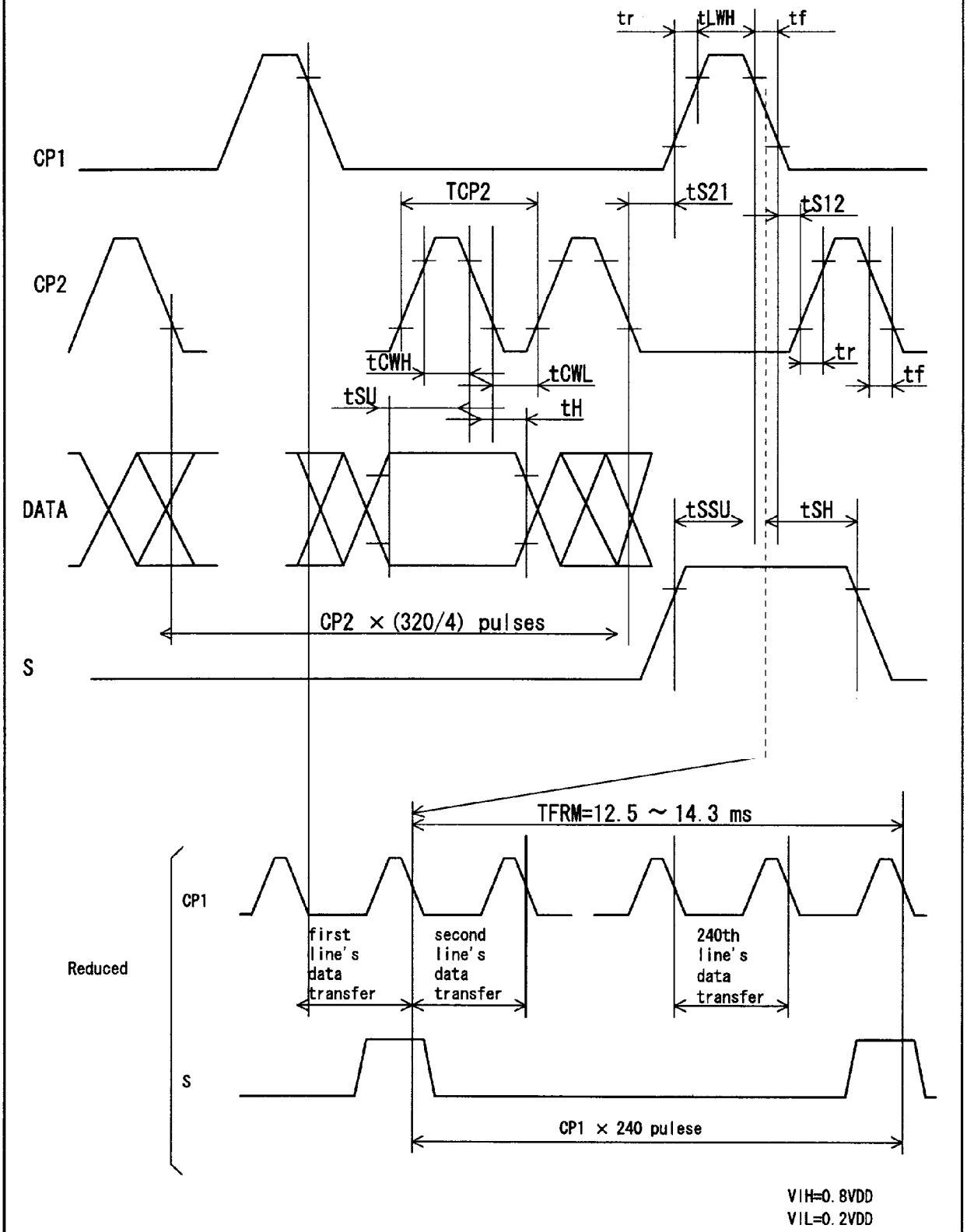

Fig.3 Interface timing chart

Table 7 Interface timing ratings

Item	Symbol	Rating			Unit
		MIN.	TYP.	MAX.	
Frame cycle Note 1)	TFRM	12.5	-	14.3	ms
CP2 clock cycle	TCP2	130	-	-	ns
"H" level clock width	tCWH	60	-	-	ns
"L" level clock width	tCWL	60	-	-	ns
"H" level latch clock width	tLWH	60	-	-	ns
Data set up time	tSU	50	-	-	ns
Data hold time	tSH	40	-	-	ns
CP2↑ clock allowance time from CP1↓	tS12	0	-	-	ns
CP1↑ clock allowance time from CP2↓	tS21	0	-	-	ns
Input signal rise/fall time (Note2)	tr, tf	-	-	trf	ns
S Signal Data set up time	tSSU	40	-	-	ns
S Signal Data hold time	tSH	60	-	-	ns

Note 1) Owing to the characteristics of this LCD module, "shadowing" will become more eminent as frame frequency goes up, flicker will become more eminent as flame frequency goes down. So it is recommended that the module should be driven according to the specified limit.

Note 2)

trf=50 in case tCT=(TCP2-tCWH-tCWL)/2≧50

trf=tCT in case tCT=(TCP2-tCWH-tCWL)/2<0

5-3 Supply voltage sequence condition

The power ON/OFF sequence shown on Fig. 4 shall be followed to avoid latch-up of drive LSIs and application of DC voltage to LCD panel.

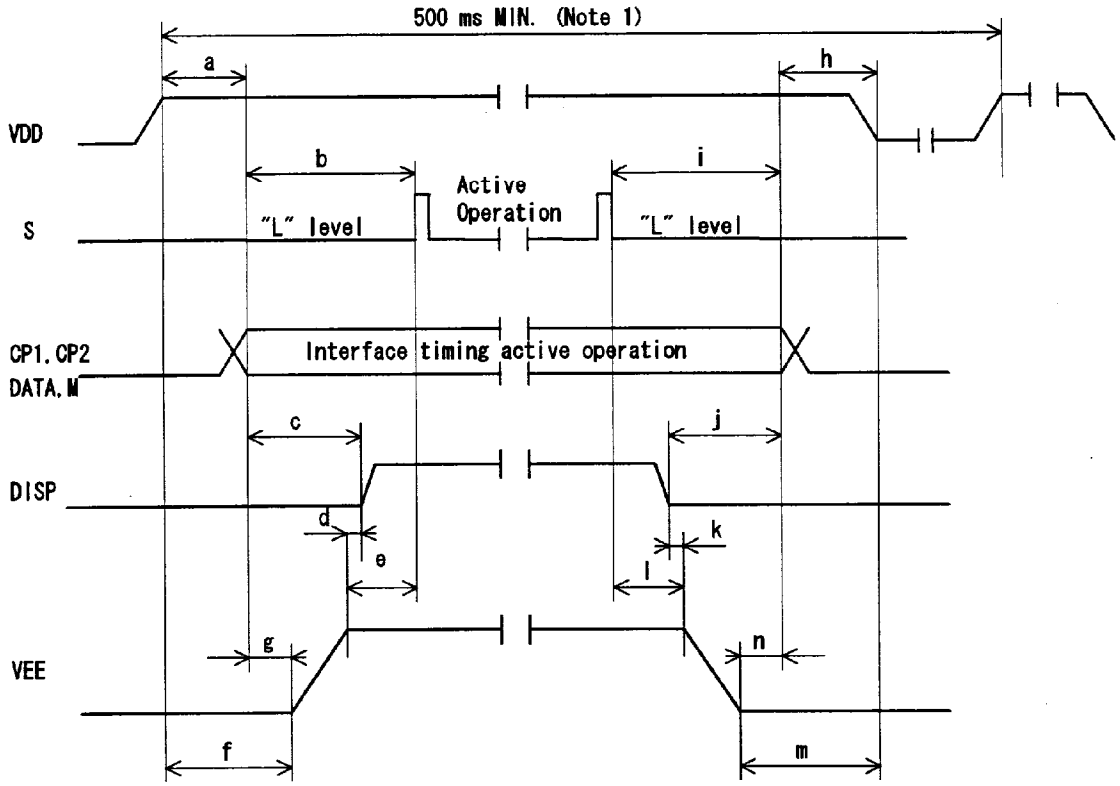

Fig. 4 Power ON/OFF sequence

Table 8 Sequence timing ratings

POWER ON		
SYMBOL	With DISP control	Without DISP control
a	0 ms MIN.	0 ms MIN. 20 ms MAX.
b	0 ms MIN.	20 ms MIN.
c	20 ms MIN.	-
d	0 ms MIN.	-
e	-	0 ms MIN.
f	0 ms MIN.	(Note 2)
g	-	20 ms MIN.

POWER OFF		
SYMBOL	With DISP control	without DISP control
h	0 ms MIN.	0 ms MIN. 20 ms MAX.
i	0 ms MIN.	20 ms MIN.
j	20 ms MIN.	-
k	0 ms MIN.	-
l	-	0 ms MIN.
m	0 ms MIN.	(Note 2)
n	-	0 ms MIN.

Note 1) Power ON/OFF cycle time. All signals and power line shall be in accordance with above sequence in case of power ON/OFF.

Note 2) VEE to be set at "VSS level"

6. Module driving method

6-1 Circuit configuration

Fig.5 shows the block diagram of the module's circuitry.

Fig.5 Circuit block diagram

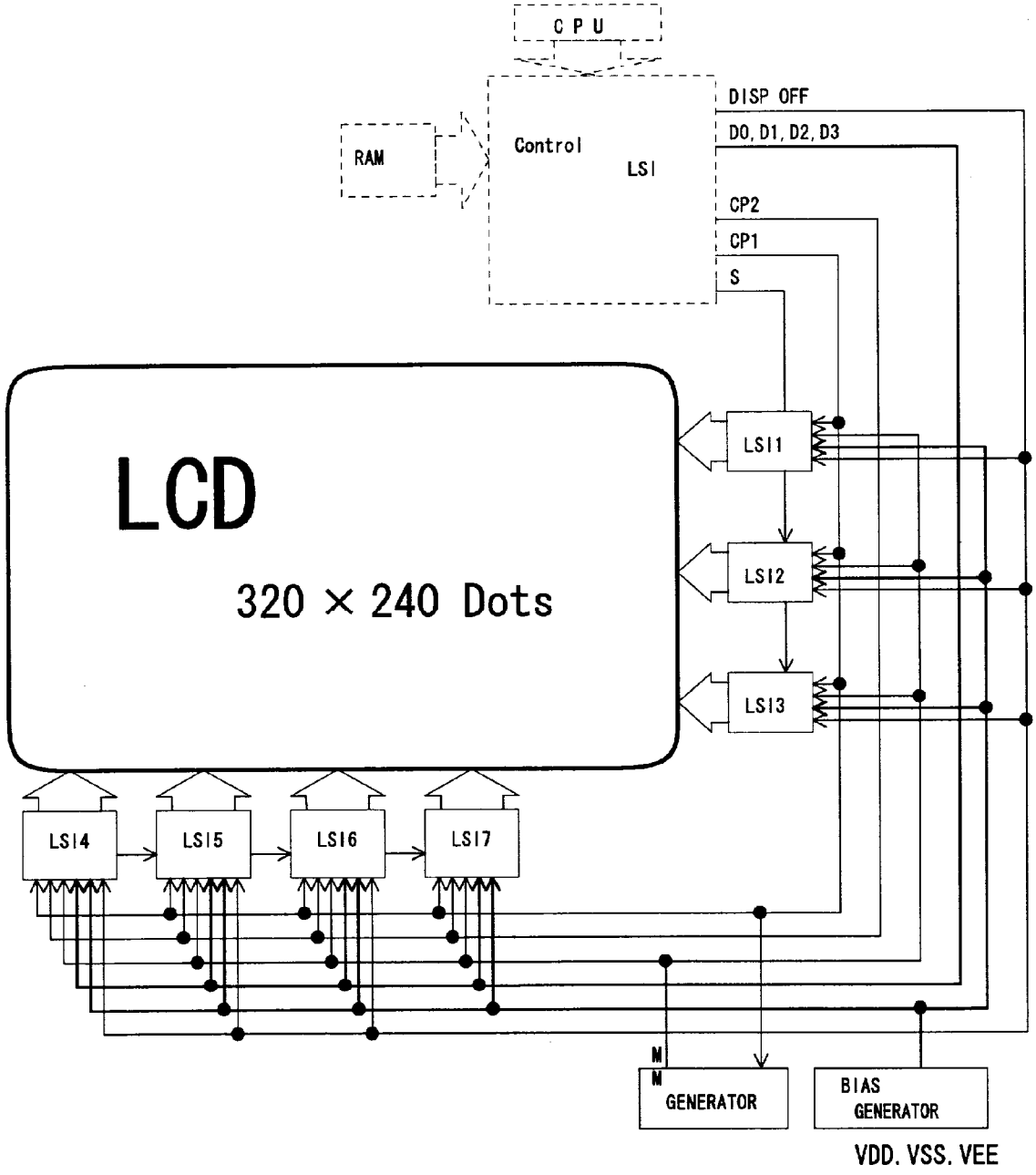

6-2 Display face configuration

The display consists of 320×240 dots as shown in Fig.1. The interface is to be driven at 1/240 duty ratio.

6-3 Input Data and Control Signal

The LCD driver is 80 bits LSI, consisting of shift registers, latch circuits and LCD driver circuits. Input data for each row (320 dot) will be sequentially transferred in the form of 4 bit parallel data through shift registers from top left of the display together with clock signal (CP2).

When input of one row (320 dots) is completed, the data will be latched in the form of parallel data corresponding to the signal electrodes by the falling edge of latch signal (CP1). Then, the corresponding drive signals will be transmitted to the 320 lines of column electrodes of the LCD panel by the LCD drive circuits.

At this time, scan start-up signal (S) has been transferred from the scan signal driver to the 1st row of scan electrodes, and the contents of the data signals are displayed on the 1st row of the display face according to the combinations of voltages applied to the scan and signal electrodes of the LCD. While the data of 1st row are being displayed, the data of 2nd row are entered. When data for 320 dots have been transferred, they will be latched by the falling edge of LP, switching the display to the 2nd row.

Such data input will be repeated up to the 240th row of each display segment, from upper row to lower rows, to complete one frame of display by time sharing method.

S generates scan signal to drive horizontal electrodes.

Since DC voltage, if applied to LCD panel, causes chemical reaction in LC materials, causing deterioration of the materials, drive wave-form shall be inverted at every display frame to prevent the generation of such DC voltage. Control Signal M plays such a role.

7. Optical characteristics

Table 9

Ta=25 ℃, Frame frequency=80 Hz
1/240 DUTY, VDD=5 V, VEE-VSS=Vmax

Parameter		Symbol	Condition			MIN.	TYP.	MAX.	Unit	Remark
Viewing angle range		θx	Co≧2	θy=0°	θx≧0°	40	-	-	dgr.	Note 1 Note 2
					θx<0°	-	-	-40	dgr.	
		θy		θx=0°	θy≧0°	25	-	-	dgr.	
					θy<0°	-	-	-40	dgr.	
Contrast ratio		Co	θx=θy=0 °			4	6	-	-	Note 3
Contrast variation		Cvar	θx=θy=0 °			-	1.3	1.5	-	Note 1
Response time	Rise	τr	θx=θy=0 °			-	190	290	ms	Note 4
	Decay	τd	θx=θy=0 °			-	210	330	ms	

Note 1) Measurement method of
Contrast, Contrast variation, Viewing angle, Response time

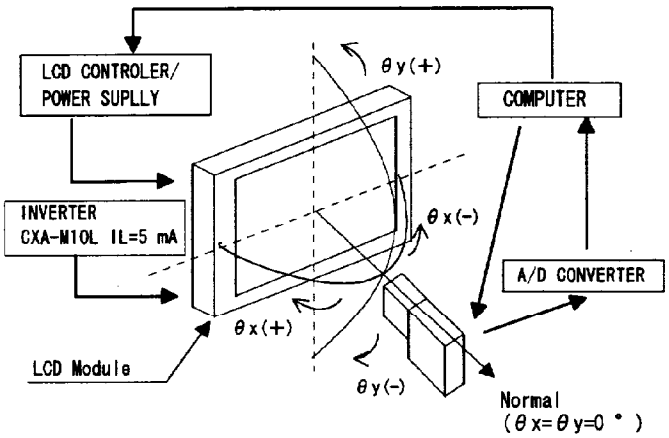

Measuring points

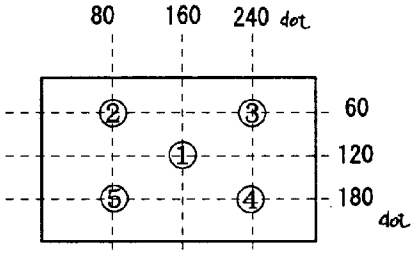

TOPCON BM-7 + quartz fiber
Measureing spot size : φ10 mm
Ta=25 ℃
In dark room
Measurement shall be executed 30 min after turning on.

Note 2) The viewing angle range is defined as follows:

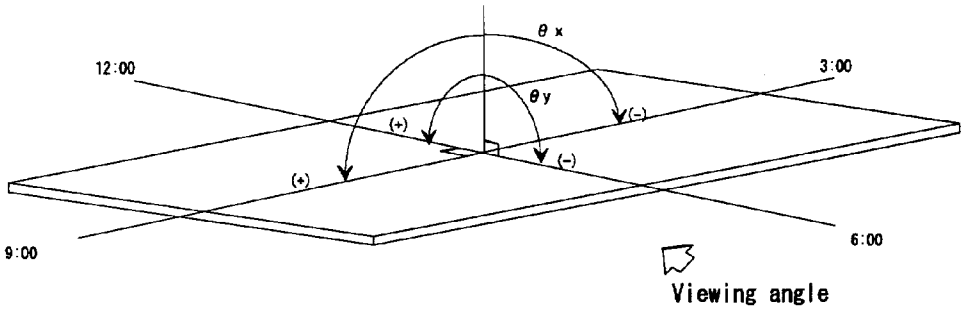

Note 3) Contrast ratio is defined as follows:

$$\text{Contrast} = \frac{\text{Luminance (brightness) all pixels "White" at Vcmax}}{\text{Luminance (brightness) all pixels "dark" at Vcmax}}$$

Vcmax is defined as follows:

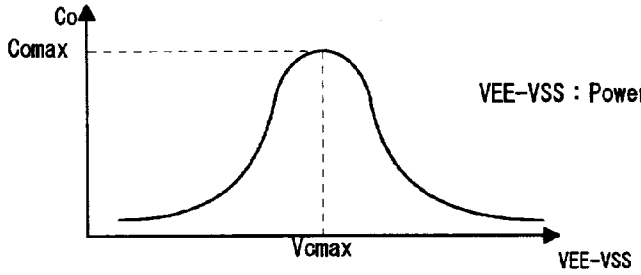

VEE-VSS : Power supply for LCD

Note 4) Defintion of response time

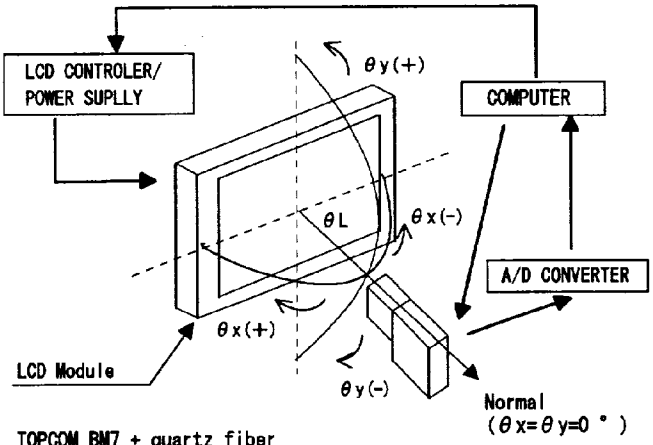

TOPCOM BM7 + quartz fiber
Measurement spot size : ϕ10 mm
Ta=25 ℃
In dark room

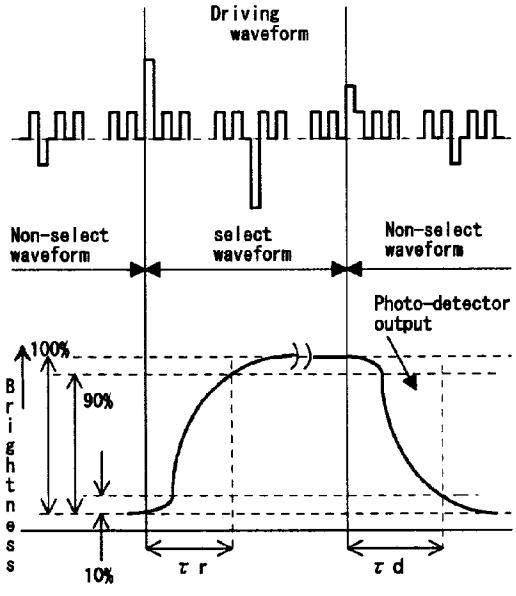

8. Characteristics of CCFT back light

The ratings are given on condition that the following conditions are satisfied.

8-1 Rating

Table 10

Parameter	Symbol	MIN.	TYP.	MAX.	Unit	Remark
Supply voltage for CCFT	VL	252	280	308	Vrms	
Supply current for CCFT	IL	3	4	5	mArms	
Brightness	B	70	100	-	cd/m^2	Note 1, 2
Brightness variation	Bver	-	1.3	1.5		Note 1, 2
Lamp frequency	FL	20	-	60	kHz	
Start voltage	VS	-	-	650	Vrms	Note 2
Power consumption	WL	-	1.4	-	W	Note 2
Life time	LL	15,000	-	-	h	

Note 1) Rating are defined as the average brightness inside the viewing area specified in Fig. 6.

Note 2) Measurement conditions

CCFT inverter : CXA-M10L (TDK)

Measurement circuit current : 5 mArms fix

(circuit voltage : approximation DC 9 V)

LCD pattern : All digits WHITE, VDD=5 V, VEE-VSS=Vmax

Ambient temperature : 25 ℃

Measurement equipment: BM-7 (TOPCOM)

8-2 Operating life time

The operating life time is 15 000 hours more under the following conditions.

CCFT inverter : CXA-M10L

IFT=5 mArms

Ta=25±5℃

The operating life time is defined as having ended when any of the following conditions occur.

-When the illuminence or quantity of light has decreased to 50 % of the initial value.

-When the light of CCFT goes to flicker remarkable.

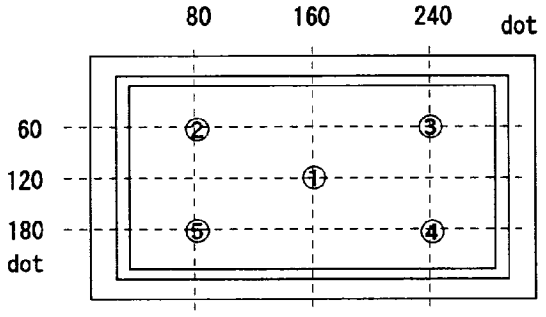

Fig. 6 Measuring point ①~⑤

9. Precautions

1) Especially the power ON/OFF sequence shown on Page.9 shall be followed to avoid latch-up of drive LSIs and application of DC voltage to LCD panel.

2) Industrial (Mechanical) design of the product in which this LCD module will be incorporated must be made that the viewing angle characteristics of the LCD may be optimized. Please consider the optimum viewing conditions according to the purpose when installing the module. (For the optical characteristics refer to the table .)

3) This module is installed using mounting holes at the four corners of module. When installing the module, pay attention and handle carefully not to allow any undue stress such as twist or bend.

A transparent acrylic resin board or other type of protective panel should be attached to the front of the module to protect the polarizer, LCD cells, etc.

4) Since the front polarizer is easily damaged. Please pay attention not to scratch on its face.

5) If the surface of the LCD cells needs to be cleaned, wipe it swiftly with cotton or other soft cloth. If still not completely clear, blow on its and wipe.

6) Water droplets, etc., must be wiped off immediately since they may cause color changes, staining, etc., if remained for a long time.

7) Since LCD is made of glass plates, dropping the module or banging it against hard objects may cause cracking or fragmentation.

8) CMOS LSIs are equipped in this module, so care must be taken to avoid the electro static charge, by earthing human body, etc.

9) Avoid to expose the module to the direct sun-light, strong ultraviolet light, etc. for a long time.

10) If stored at temperatures below specified storage temperature, the LC may freeze and be deteriorated. If storage temperatures exceed the specified rating, the molecular orientation of the LC may change to that of a liquid, and they may not revert to their original state.

11) Disassembling the LCD module can cause permanent damage and should be strictly avoided.

12) Don't use any materials that emit gas from epoxy resin (amines' herdener) and silicone adhesive agent (dealcohol or deoxym) to prevent change polarizer color owing to gas.

10. Applicable inspection standard

The LCD module shall meet the following inspection standard
:S-U-012-01

11. This specification describes display quality in case of no gray scale. Since display quality can be affected by gray scale methods, display quality shall be carefully evaluated for the usability of the LCD module in case gray scale is displayed on the LCD module.

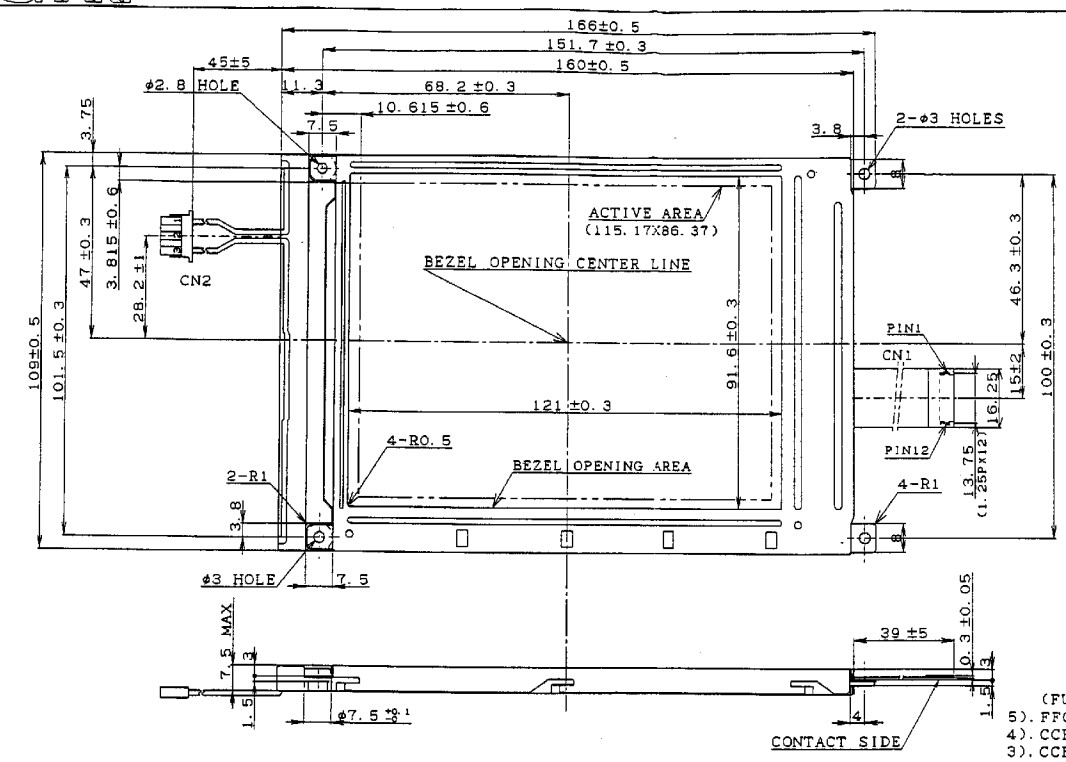

CN1 INTERFACE CABLE

Pin No	SIMBOL
1	S
2	CP1
3	CP2
4	NC
5	DISP OFF
6	D0
7	D1
8	D2
9	D3
10	VDD
11	VSS
12	VEE

CN2 CCFT CONNECTOR

Pin No	1	2	3
SIMBOL	HOT	NC	GND

Fig. 7

(FUJIKURA EQUIVALENT)
5). FFC CABLE:UL2896. 1. 25P
4). CCFT CABLE:UL3579, AWG26
3). CCFT CONNECTOR:BHR-03VS-1(JST)
2). UNSPECIFIED TOL TO BE ±0.5
NOTE1). UNIT IS mm.

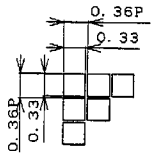

DOTS SIZE

DISPLAY POSITION

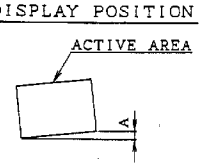

1) OBLIQUITY OF DISPLAY AREA |A|< 0.8

1996. 11. 26	CHANGE FOR TOLERANCE AND POSITION FIX.	J. N	LM32019T	名称 NAME	LCD MODULE OUTLINE DIMENSIONS
年月日 DATE	訂正記事 REVISE	作成 PREPA	適用機種 MODEL		
材質 MATERIAL	板厚 THICK	仕上 FINISH	尺度 SCALE 1/1	アッセン ASSEMBLY	320X240 DOTS
				事業コード PARTS CODE	
設計 DESIGN	写図 TRACE	検図 CHECK	検図 CHECK	承認 APPROVE	作成日付 DATE 1996. 11. 26
J. NISHIMOTO	T. Murata	M. Kikuchi	SHARP CORPORATION	図番 DRAWING No.	
			発行部門 NARA LCD GROUP		

/lmsd96/lm32019t/saikanzu