CLATINA

ASSEMBLY INSTRUCTIONS

Part		Qty.
A		5
B		1
C		1
D		1
E		1
F		1
G	M6 x 20mm	2
L	5#	1
SPARE		2

1

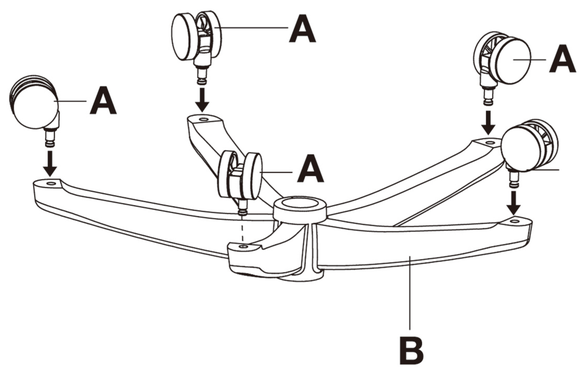

2

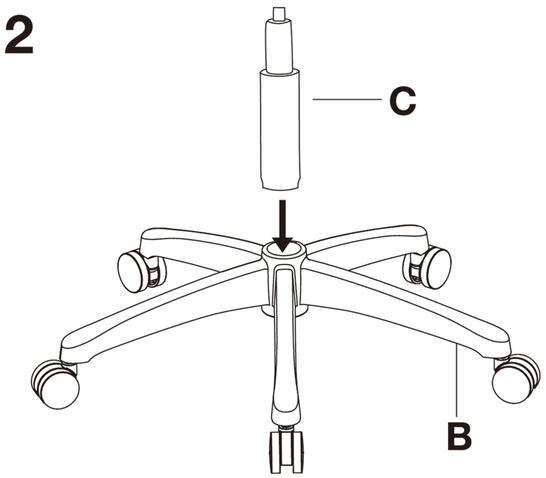

3

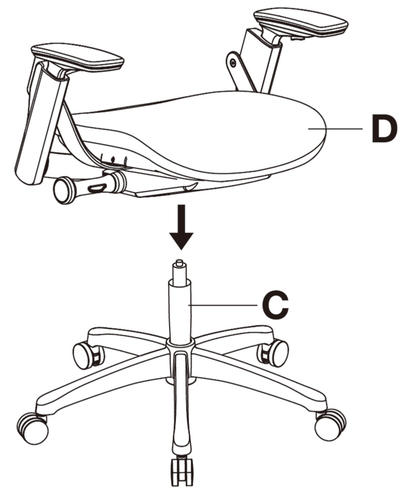

4

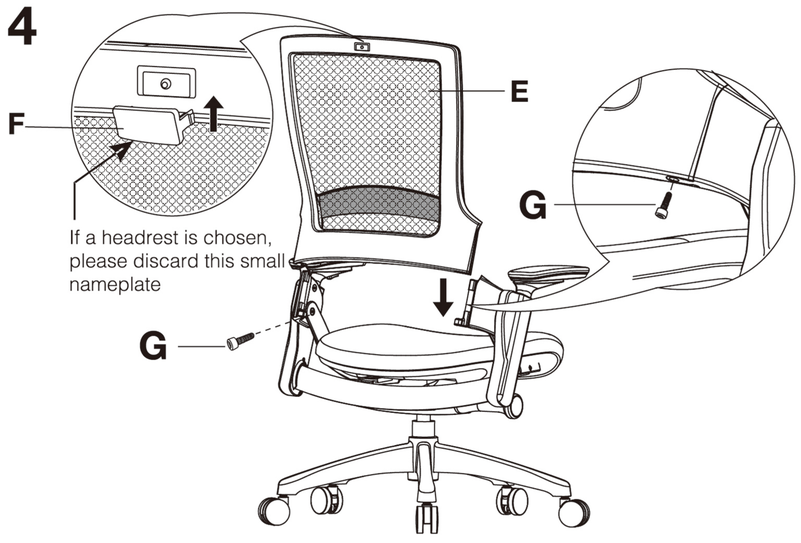

5